MARENGO SUBDIVISION ORDINANCE

Article 1 General Subdivision Provisions	**Page**
101 Title	1-1
102 Purposes	1-1
103 Authority	1-1
104 Jurisdiction	1-1
105 Interpretation and Separability	1-2
106 Repeal of Existing Ordinance	1-2
Article 2 Subdivision Review Procedure and Submission Requirements	
201 Concept Plan	2-1
201.1 Submittal and Scheduling	2-1
201.2 Information Required	2-1
201.3 Staff and Consultant Reports	2-2
201.4 Pre-Application Meeting	2-2
201.5 Pre-Application Summary Report	2-2
201.6 Determination on Need for Full Concept Plan Review	2-2
201.7 Revised Concept Plan Submission	2-2
201.8 Planning and Zoning Commission Meeting	2-2
201.9 Planning and Zoning Commission Report	2-3
201.10 Revised Concept Plan Submission	2-3
201.11 City Council Meeting	2-3
201.12 Validity of Concept Plan	2-3
202 Preliminary Plat	2-3
202.1 Staff Meeting	2-3
202.2 Plats with Four or Fewer Lots	2-3
202.3 Submittal, Scheduling, and Notice	2-3
202.4 School and Park District Action	2-4
202.5 Information Required	2-4
202.6 Staff and Consultant Reports	2-6
202.7 Planning and Zoning Commission Meeting and Recom.	2-6
202.8 Planning and Zoning Commission Report	2-6
202.9 Revised Preliminary Plat Submission	2-7
202.10 City Council Meetings and Action	2-7
202.11 Preliminary Plat Expiration	2-7
203 Final Plat	2-7
203.1 Submittal, Scheduling, and Notice	2-8
203.2 Information Required	2-8
203.3 Supporting Documents	2-8
203.4 Staff and Consultant Reports	2-9
203.5 Planning and Zoning Commission Meeting and Recom.	2-9
203.6 Planning and Zoning Commission Report	2-9
203.7 Revised Final Plat Submission	2-9
203.8 City Council Meeting and Actions	2-10
203.9 Final Plat Expiration	2-10
203.10 Signature on Final Plat	2-10
203.11 Recording of Final Plat	2-10

204 Plats of Vacation 2-10
204.1 Submission of Plats of Vacation 2-10
204.2 Plat of Vacation Distribution 2-10
204.3 Written Approval of Easements 2-11
204.4 Review of Plat of Vacation by Planning and Zoning Commission 2-11
204.5 Planning and Zoning Commission Approved Plat of Vacation 2-11
204.6 Review by the City Council 2-11
204.7 Recording of Plat of Vacation 2-11
204.8 City Council Approved Plat of Vacation Expiration 2-11

205 Procedure for Resubdivision 2-11
206 Plat Corrections and Addenda 2-12
207 Chart 1 - Marengo Subdivision Process 2-13

Article 3 Design Requirements
301 Conservation Subdivision Standards 3-1
301.1 Purpose 3-1
301.2 Density 3-1
301.3 Lot Clustering Siting Standards 3-2
301.4 Open Space 3-3
301.5 Curb and Gutter/Vegetated Swales 3-3
301.6 Sidewalks/Walkways 3-3
301.7 Street Light Spacing 3-3
301.8 Natural Area and Buffer Protection and Conservation 3-3

302 Traditional Subdivisions Standards 3-4
302.1 Purpose 3-4
302.2 Street Layout 3-5
302.3 Blocks 3-5
302.4 Sidewalks 3-5
302.5 Crosswalks 3-5
302.6 Street Lighting Spacing 3-5
302.7 Open Space 3-5

303 Streets
303.1 Classification of Streets 3-6
303.2 Cul-de-sacs 3-6
303.3 Continuing Streets 3-7
303.4 Dead-End Streets 3-7
303.5 Access to Adjacent Property 3-7
303.6 Alleys 3-7
303.7 Half Streets 3-8
303.8 Private Streets 3-8
303.9 Medians 3-8
303.10 Street Names 3-8
303.11 Intersection of Streets 3-8
303.12 Street Jogs 3-8
303.13 Topography and Layout 3-8
303.14 Sight Distances 3-8
303.15 Reverse Curves 3-9

303.16 Return Radii at Intersections and Corner Lots 3-9
303.17 Minimum Design Requirements for Urban/Traditional Subdivision Streets 3-12
303.18 Minimum Design Requirements for Rural/Conservation Design Subdivision Streets 3-16

304 Bicycle Circulation 3-18

305 Lots 3-18
305.1 Lot Arrangement 3-18
305.2 Auto Access 3-18
305.3 Double Frontage 3-18
305.4 Lot Dimensions 3-18
305.5 Side Lot Lines 3-18

306 Landscaping
306.1 Street Trees 3-18
306.2 Plant Type 3-18
306.3 Tree Preservation 3-19
306.4 Tree Survey 3-19
306.5 Transformer, Cable, and Other Ground Mounted Fixture Screening 3-19

307 Natural Area Protection and Management 3-19
307.1 Natural Landscape Sensitivity Plan 3-19
307.2 Natural Area Management 3-20
307.3 Landscape Management and Maintenance Plan 3-20

308 Signs 3-22

309 Easements
309.1 Easements 3-22
309.2 Limitations on the Use of Easements 3-23
309.3 Maintenance of Easements 3-23

310 Electric and Communication
310.1 Coordination 3-24
310.2 Lines Underground 3-24
310.3 Pole Placement 3-24
310.4 Street Lighting 3-24
310.5 Permits for Utility Services 3-25

311 Impact Assessment
311.1 Flood Hazard Area 3-25
311.2 Critical Soils 3-26
311.3 Traffic Impacts 3-26
311.4 Snowplowing 3-26

312 Construction Specifications 3-26
312.1 Excavation and Grading 3-26
312.2 Base Courses 3-26

312.3 Bituminous Surface Courses 3-27
312.4 Bituminous Surface 3-27
312.5 Concrete Pavement 3-27
312.6 Sidewalks 3-27
312.7 Curb and Gutter 3-27
312.8 Drainage 3-28
312.9 Topsoil and Seeding 3-28
312.10 Trench Backfill 3-28

Article 4 Water and Wastewater Systems
401 Water Supply 4-1
401.1 General 4-1
401.2 Capacity 4-1
401.3 System Design 4-2
401.4 Fire Hydrants 4-3

402 Sanitary Sewers 4-3
402.1 General 4-3
402.2 Sanitary Design and Placement 4-4

403 Oversizing Water and Sewer Facilities 4-5

Article 5 Stormwater Control 5-1

Article 6 Impact Fee Ordinance
601 Dedication of School Site or Payment of Fees in Lieu Thereof 6-1
601.1 Legislative Intent 6-1
602 Park and Recreation Space and Facilities 6-1
602.1 Criteria for Requiring School Site Dedications 6-1
602.2 Criteria for Requiring Park and Recreational Land Dedications 6-2
602.3 Fire and Rescue Capital Facilities Contributions and Site Dedications 6-3
602.4 Criteria for Requiring Library Site Dedications 6-4
603 Developer Donation to the Local Public Library District. 6-5
603.1 Criteria 6-5
603.2 Refunds 6-6
603.3 Fair Market Value 6-6
603.4 Criteria for Requiring Dedication and a Contribution 6-7

604 Consumer Price Index 6-7
605 Density Formula 6-8
606 Reservation of Additional Land 6-8
607 Combining with Adjoining Developments 6-8
608 Site Requirements 6-9
608.1 Topography and Grading 6-9
608.2 Improved Sites 6-10
608.3 Environmental Risk Audit 6-11
608.4 Suitability of Soils at Site 6-12
608.5 Title Insurance, Survey, Assessment Plats 6-13
608.6 Real Estate Tax Escrow 6-13

609 Objections 6-13
609.1 Duties of the Planning and Zoning Commission 6-14
609.2 Information and Services to be Used 6-14
609.3 Procedure for Resolving an Objection 6-14
609.4 Costs and Fees 6-15

610 Condition of Annexation 6-15
611 Indemnification 6-16
612 Distribution 6-16
613 Time of Payment 6-17

Article 7 Administration and Enforcement
701 General
701.1 Authority to Review 7-1
701.2 Law Compliance 7-1
701.3 Plat Approval 7-1
701.4 Recording of Plat 7-1
701.5 Plat Violations 7-1
701.6 Ordinance Enforcement 7-1
701.7 Cost of Compliance 7-1

702 Violations and Penalties
702.1 Illegal to Transfer 7-1
702.2 No Metes or Bounds 7-2

703 Variations and Exceptions 7-2

704 Separate Publication 7-2

705 Engineering Drawings and Guarantees 7-2
705.1 Engineering Drawings 7-2
705.2 Construction Supervision 7-2
705.3 Maintenance of Improvements 7-2
705.4 Estimates of Costs 7-2
705.5 Amount of Performance Guarantee 7-3
705.6 Partial Release 7-3
705.7 Complete Release 7-3
705.8 Types of Guarantees 7-3
705.9 Completion of Improvements 7-4

Article 8 Plat Certificates, Guarantees and Other Miscellaneous Requirements
801 General Requirement 8-1
802 Required Certificates - Preliminary Plats 8-1
803 Required Certificates - Final Plat 8-2
804 Tax Search 8-10
805 Retained Personnel Fees 8-10
806 Filing Fee: Preliminary Plat 8-11

Article 9 Definitions

901 General 9-1
902 Listing of Definitions 9-1

Appendix A. Engineering Summary
Appendix B. Table of Estimate Population per Dwelling Units
Appendix C. Endangered Species Consultation Action Report
Appendix D. Security Requirements
Appendix E. Retained Personnel Fees
Appendix F. Recommended Street Trees
Appendix G. Water Main Materials List
Appendix H. Fees

List of Figures

Figure 1 – Conventional Subdivision Design vs. Conservation Design 3-2
Figure 2 – Lot Clustering 3-2
Figure 3 – Images of Conservation Design 3-4
Figure 4 – Images of Traditional Neighborhood Design 3-4
Figure 5 – Conventional Subdivision Design vs. TND design 3-5
Figure 6 – Street Light Spacing 3-5
Figure 7 – Typical cul-de-sac (left) vs. crescent layout (right) 3-6
Figure 8 – Examples of alternatives to typical cul-de-sac street design 3-7
Figure 9 – T-turnaround illustration 3-7
Figure 10 – Examples of permitted and prohibited alleys 3-8
Figure11 – Minimum Design Requirements for Urban/Traditional Arterial Roads 3-12
Figure12 – Minimum Design Requirements for Urban/Traditional Collector Roads 3-12
Figure 13 - Minimum Design Requirements for Local/Traditional Roads 3-13
Figure 14 - Minimum Design Requirements for Business/Industrial Roads 3-13
Figure 15 - Minimum Design Requirements for Rural Arterial Roads 3-16
Figure 16 - Minimum Design Requirements for Rural Collector Roads 3-16
Figure 17 - Minimum Design Requirements for Local/Traditional Roads 3-17
Figure 18 - Minimum Design Requirements for Local/Traditional Roads 3-17

List of Charts and Tables

Chart 1 - Marengo Subdivision Process 2-13

Table 1 - Minimum Design Requirements for Urban/Traditional Subdivision Streets 3-10
Table 2 - Minimum Design Requirements for Rural/Conservation Design Subdivision Streets 3-14
Table 3 – Public Water Supply 4-1
Table 4 – Sanitary Sewer Service 4-3
Table 5 – School Size and Classification 6-2
Table 6 – Requirement and Population Ratio Criteria for Schools 6-3
Table 7 – Requirement and Population Ratio Criteria for Fire 6-4

Article 1

TITLE, PURPOSE, AND GENERAL PROVISIONS

101 TITLE

This Ordinance shall be known as and may be cited as "The City of Marengo Subdivision Ordinance."

102 GENERAL

For the purposes of uniform interpretation of this Ordinance, certain terms and phrases shall be deemed to have the meaning ascribed to them in this Section. The words "shall" and "must" indicate mandatory items, while the word "may" indicates optional items.

103 PURPOSE

In the subdivision and resubdivision of land, a developer is required to comply with certain procedures outlined in the Illinois Compiled Statutes. This Ordinance establishes additional procedures and requirements governing the platting of land in the City, and is adopted for the following purposes:

A. To establish reasonable design standards and procedures for subdivision and resubdivision of land;
B. To provide for an orderly subdivision process and promote continuity with existing developments;
C. To encourage development which is compatible with the natural features of a particular site;
D. To establish guidelines for the dedication, use and continuing maintenance of common areas;
E. To establish a single document to serve as a guide in providing an adequate street system; public utilities (sewer and water); surface drainage and stormwater control; and other services related to the use of subdivided land; and
F. To protect and provide for the public health, safety and general welfare of the citizens of the City.

104 AUTHORITY

This Subdivision Ordinance regulates the subdivision of land under the jurisdiction of the City. The subdivision plans and layouts are incorporated in the City's Comprehensive Plan. It is intended to provide for the orderly development of the City and its environs; for the location and width of proposed streets within new subdivisions, the reservation of roadway corridors for the establishment of new collector and arterial streets in locations consistent with the Comprehensive Plan, and connections with other existing or planned streets; for the dedication and acceptance of land for public use; for the installation and construction of utilities, roadways and other improvements essential to service the subdivided lands; for the dedication and acceptance of land acquired for schools, parks, playgrounds and other public uses; for the preparation of subdivision plans and the procedure for the submittal, approval and recording of

subdivision plats in and about the City, and is in accordance with the authority vested in the municipality under the provisions of the Illinois Compiled Statutes.

105 JURISDICTION

This Ordinance shall apply to any subdivision or dividing of any parcel of land made within the borders of the City as well as to any subdivision or dividing of any parcel of land within 1.5 miles of the corporate limits of the City. Except as otherwise provided in this Ordinance, all standards herein shall apply equally to subdivisions both in the City and within its 1.5 mile planning jurisdiction.

106 INTERPRETATION AND SEPARABILITY

106.1 Interpretation. When interpreting and applying the provisions of this Ordinance, the standards of this Ordinance shall be held to be the minimum requirements throughout the City.

106.2 Conflicts of Law. Where this Ordinance imposes greater restrictions or requirements than are imposed or required by other provisions of the law or rules, covenants or other agreements, the provisions of this Ordinance shall control. However, nothing herein shall interfere with or be construed to abrogate or annul any easements, covenants, deed restrictions or agreements between parties which impose restrictions greater than those imposed by this Ordinance.

106.3 Invalidity. If any section, provision or portion of this Ordinance is adjudged unconstitutional or invalid by a court of competent jurisdiction, the remainder of this Ordinance shall not be affected thereby.

107 Repeal of Existing Ordinance

The existing Subdivision Ordinance of the City, entitled An Ordinance for the Subdivision and Platting of Land and Providing for Jurisdiction. Of Subdivision Improvements, adopted March 24, 1977, as amended, is hereby repealed.

Article 2

SUBDIVISION PROCEDURES AND SUBMISSION REQUIREMENTS

201 CONCEPT PLAN

201.1 Submittal and Scheduling. Prior to submitting a Preliminary Plat for approval, the developer shall submit to the City **ten copies** of a Concept Plan and post a retained personnel fee as required by Article 8 of this Ordinance. The City Clerk shall schedule a Pre-application Meeting at a time at least 20 business days from the date of filing.

201.2 Information Required. Except where the City Administrator specifically provides otherwise, the Concept Plan shall contain at least the following information:

A. Identification
   (1) Proposed name of development;
   (2) Scale, date and north arrow;
   (3) Vicinity map;
   (4) Name and address of developer and engineer;
   (5) Boundaries;

B. Existing Site Conditions
   (6) Wetlands as shown on the U. S. Fish and Wildlife maps;
   (7) Floodplain as shown on the FEMA maps (wooded areas as aerial);
   (8) Location of water and sewer facilities closest to site;
   (9) Location of nearest park(s);
   (10) Location of existing streets within 1,000 feet of site;
   (11) Identification of hazards (underground storage tanks, electric utility lines) on or adjacent to site;
   (12) Existing easements on-site;
   (13) Existing zoning;
   (14) Environmental Reconnaissance of the Site - examining and evaluating site conditions through the use of available historical information regarding land usage, to identify possible environmental degradation or impairment. Environmental problems should include potential, actual and alleged hazardous contamination above or below the ground at the site;
   (15) Historic districts and historic landmark properties;
   (16) Adjacent properties;

C. Nature of proposed development
   (17) Number of proposed lots;
   (18) Size of tract;
   (19) Minimum lot size proposed;
   (20) Approximate location of streets, water and sanitary sewer;
   (21) Indication of whether floodplain or wetlands will be modified;
   (22) Indication of whether park and/or school land and facilities will be provided;
   (23) Proposed zoning;
   (24) Calculation of gross and net density;
   (25) Proposed land use ratio, including streets, wetlands, etc.

201.3 Staff and Consultant Reports. A least five business days prior to the pre-application meeting date, the City staff and appropriate retained consultants shall file a preliminary report with the City Clerk who shall distribute copies to the Planning and Zoning Commission, other appropriate City staff, officials and the developer.

201.4 Pre-Application Meeting. The developer shall meet with the appropriate City staff to evaluate the proposed Concept Plan and alternatives to it. Among other things, the Concept Plan shall consider the future development potential of the surrounding area, especially the extension of streets and utilities, and how this proposal should relate to it.

Staff will discuss potential problems with the development, apparent violations of existing ordinances, and suggest changes to the Concept Plan; including the desire for alterative designs. Staff will not take action other than to determine that the review is complete or that additional information or alternative concepts are needed for its review.

Review of the Concept Plan does not relieve the developer from compliance with any changes in the City ordinances made after review of the Concept Plan and prior to approval of a Preliminary Plat by the City Council. Additional meetings with staff may be necessary prior to presenting the Concept Plan to the Planning and Zoning Commission.

201.5 Pre-Application Summary Report. Staff will file a report summarizing the discussions at the Pre-Application meeting(s) at least 5 days prior to the Planning and Zoning Commission meeting.

201.6 Determination on Need for Full Concept Plan Review. Upon completion of the Pre-Application Meeting, the City Administrator is authorized to determine the need for concept plan review by the Planning and Zoning Commission and City Council, if the Concept Plan involves the division of a lot, block, or tract of property not greater than four (4) acres in size into not more than four (4) lots or blocks which does not involve any new streets or easements of access. The Administrator's recommendation shall be in writing and shall include any conditions of approval or his reasons for disapproval. If the City Administrator determines that he does not require review by the Planning and Zoning Commission and City Council, the Developer may proceed directly to the Preliminary Plat process. Otherwise, all Concept Plans will be reviewed and discussed at a regularly scheduled Planning and Zoning Commission meeting no more than 30 days after the Pre-Application Meeting, and at a regularly scheduled City Council meeting no more than 20 days after review by the Planning and Zoning Commission.

201.7 Revised Concept Plan Submission. The Developer shall incorporate changes recommended by City staff and retained consultants and shall submit 15 full size and 10 11x17 sized copies of the revised Concept Plan at least 10 days prior to meeting with the Planning and Zoning Commission.

201.8 Planning and Zoning Commission Meeting. The developer shall meet with the Planning and Zoning Commission to evaluate the proposed Concept Plan. The

Planning and Zoning Commission will provide informal direction as to the generally acceptability of the proposed concept, and will recommend modifications if desired.

201.9 Planning and Zoning Commission Report. The Planning and Zoning Commission will submit a report summarizing the discussion and recommended changes at least 5 days prior to the City Council meeting.

201.10 Revised Concept Plan Submission. The Developer shall incorporate changes recommended by the Planning and Zoning Commission and shall submit 15 full size and 10 11x17 sized copies of the revised Concept Plan at least 10 days prior to meeting with the City Council.

The City Clerk shall schedule a City Council meeting within 20 days of the Planning and Zoning Commission meeting after all required documents have been received.

201.11 City Council Meeting. The developer shall meet with the City Council to evaluate the proposed Concept Plan. The City Council will provide informal direction as to the generally acceptability of the proposed concept, and will recommend modifications if desired.

201.12 Validity of Concept Plan. A Concept Plan shall remain valid for one year following the Developer's meeting with City Council.

202 PRELIMINARY PLAT

202.1 Staff Meeting. Prior to submitting a Preliminary Plat for review by the Plan Commission, the Developer shall meet with appropriate City Staff and retained consultants to discuss submission requirements, conformance with City standards, consistency with the Concept Plan, and to recommend modifications.

202.2 Plats With Four or Fewer Lots. The City Administrator is authorized to recommend approval or denial of a preliminary plat to the City Council, without referral to or recommendation by the Planning and Zoning Commission, if the preliminary plat involves the division of a lot, block or tract of property not greater than four (4) acres in size into not more than four (4) lots or blocks which does not involve any new streets or easements of access. The Administrator's recommendation shall be in writing and shall include any conditions of approval or his reasons for disapproval.

202.3 Submittal and Scheduling and Notice. The developer shall submit 15 full size and 10 11x17 sized copies of a Preliminary Plat to the City within one year of completion of Concept Plan review, and shall post the required retained personnel fee prior to the Planning and Zoning Commission meeting at which it is to be heard.

The City Clerk will distribute the Preliminary Plat to the appropriate City staff for their review and shall schedule a review of the Preliminary Plat for a meeting of the Planning and Zoning Commission within 30 days after all required documents have been received.

The City Clerk shall not accept a Preliminary Plat for review unless the property is appropriately zoned for the intended use and density, or unless a petition to amend the Zoning Ordinance or map has been filed which, if adopted, would have the same effect.

The Developer will notify the following individuals and organizations of the date time and place of the meeting when the Final Plat will be considered. He shall furthermore provide the City Clerk and City Attorney with an affidavit stating that each of the following individuals and organizations was notified by U.S. Mail, certified mail, return receipt requested and provide the Clerk with U.S.P.S. documentation from the mailing indicating the address to which each notice was sent:

A. City Attorney;
B. City Engineer;
C. Fire Protection District;
D. Homeowners Association (any which have indicated an interest in the review of the subdivision);
E. Plan Commission Members;
F. Park District
G. School District(s);
H. Contiguous property owner(s);
I. Township Road Commissioner (if annexation is being considered);
J. Township Supervisor (if annexation is: being considered);
K. Utility Company Representatives,
L. Cable Television,
M. Electric,
N. Gas,
O. Telephone,
P. Sewer and Water Utility(s);
Q. U. S. Postmaster for the City of Marengo;
R. Illinois Department of Conservation Endangered Species Notification;
S. Illinois Department of Transportation (if a driveway and/or access permit is needed to enter any State road);
T. McHenry County Highway Department (if a driveway and/or access permit is needed to enter any County road);
U. McHenry County Soil and Water Conservation District;
V. McHenry-County Department of Health (if it involves septics or wells); and
W. Marengo Rescue Squad.

202.4 School and Park District Action: All school districts will be requested to agree in writing to accept the school donation or submit its objection to the Planning and Zoning Commission. The Park District will be requested to agree to accept designated public open space in writing or make an objection to the Planning and Zoning Commission. School districts and the Park District will be requested to agree to accept lands to be donated to the respective districts before the initial Planning and Zoning Commission meeting.

202.5 Information Required. Except where the City Administrator specifically provides otherwise, the Preliminary Plat submittal shall contain at least the following information:

A. Identification and description

(1) Proposed name of development;
(2) Vicinity map;
(3) Location by township, section, range;
(4) Legal description;
(5) Name and address of developer and engineer;
(6) Scale (1" = 100 feet required), date and north arrow. Elevations (United States Geodetic Survey [USGS] shall be used);

B. Natural Area Protection and Management Plan (see Section 307)

C. Nature of existing conditions

(7) Aerial photograph;
(8) Boundary line of development, acreage of tract location of property lines and names of subdivisions within 300 feet;
(9) Locations and dimensions of streets which lie in, adjacent to, or near the development;
(10) Location of water and sewer facilities together with a description of the same which lie in, adjacent to, or near development;
(11) Location of railroad, utility and other easements or facilities which lie in, adjacent to, or near development Location of parks, recreation and open space owned by the public or by property owners associations which lie in, adjacent to, or near development;
(12) Structures on the development site with an indication of whether they will remain, be changed in use, or will be removed;
(13) Existing elevations at 1 or 2 foot intervals which lie in site and within 300 feet of it;
(14) Identification of drainage basins which lie in, adjacent to, and near the development;
(15) Consultation Agency Action Report to the Illinois Department of Natural Resources (IDNR), in compliance with 520 ILCS 1O/1 et seq.
(16) Location of water courses;
(17) Delineation of wetlands, and, floodplain together with studies explaining how the wetlands and floodplain were, determined and, evaluating the quality of the former;
(18) Submission of an Archaeological Phase 1 report prepared by an I.H.P.A. certified professional archaeologist to identify any archeologically sensitive areas, which lie in, adjacent to, or near development;
(19) Location of any historic districts or landmark sites, which lie in, adjacent to, or near development;
(20) Zoning on development tract and adjacent tracts. Such additional information as required by the reviewing authority;

D. Proposed development

(21) Layout of streets, water and sewer facilities together with relevant information, including proposed street typical sections, water and sewer line sizes Location and improvement plans of proposed parks, recreation and open space; statement of intent regarding ownership of these areas or facilities;
(22) Any proposed modifications to floodplain or wetlands. Approximate location and size of stormwater detention areas together with support information describing how the sizes of the areas were determined;

(23) Existing drainageways with proposed conveyance systems for areas receiving runoff in accordance with the requirements of Chapter 29 of the Marengo Municipal Code;
(24) Location of lot lines, setback lines and identification of easements;
(25) Information describing the number of lots, lot areas and widths for each lot;
(26) Soils information as required by County Department of Health, where on-site sewage disposal systems proposed;
(27) Traffic impact analysis and other studies;
(28) Fiscal impact analysis;
(29) Any proposed change in zoning and list of all variances from any municipal code regulation;
(30) Phasing;
(31) Construction access;
(32) A letter from each affected School District and Park District indicating whether they request the dedication of a school site, or a cash donation in lieu of land,
(33) Appropriate certificates as required by this Ordinance;
(34) If septic systems are to be used in the proposed subdivision the developer shall submit a soils report with each copy of the Preliminary Plat.

202.6 Staff and Consultant Reports. At least five days prior to the meeting date, the City staff and appropriate retained consultants shall file a preliminary report summarizing relevant comments with the City Clerk who shall distribute copies to the Planning and Zoning Commission, other appropriate city staff, officials and the developer.

202.7 Planning and Zoning Commission Meetings and Recommendations. The Planning and Zoning Commission shall hold a regularly scheduled public meeting to review the proposed Preliminary Plat. The owner or his designated representative is required to be present at this meeting.

The Planning and Zoning Commission may require such modifications or revisions of the Preliminary Plats as are deemed necessary in the interest and needs of the community. Additional meetings with the Planning and Zoning Commission may be required to review modifications.

The Planning and Zoning Commission shall recommend denial, approval, or approval with amendments, conditions and/or restrictions within 90 days from the date of the completed application (including all supporting data), unless such time is extended by mutual consent.

202.8 Planning and Zoning Commission Report. Within 30 days following the approval or denial of the Preliminary Plat, the Planning and Zoning Commission, with the assistance of City staff and retained consultants, shall prepare a report of their findings and recommendation for action by the City Council. If recommending denial, the Planning and Zoning Commission shall include in their report a written statement setting forth the reasons for disapproval and specifying the aspects in which the proposed plat fails to conform to this Ordinance or with the intent of the Comprehensive Plan.

202.9 Revised Preliminary Plat Submission. The Developer shall incorporate changes recommended by the Planning and Zoning Commission and shall submit 15 full size and 10 11x17 sized copies of the revised Preliminary Plan at least 15 days prior to meeting with the City Council.

202.10 City Council Meetings and Action. The Developer shall submit 15 full size and 10 11x17 sized copies of the revised Plat addressing conditions placed on approval by the Planning and Zoning Commission. After all required documents have been received, the City Clerk shall schedule the Preliminary Plat for a meeting of the City Council.

The City Council shall accept, accept with modifications and/or conditions, remand to Planning and Zoning Commission for further review, or reject the Preliminary Plat within 30 days of its regularly scheduled meeting following the action of the Planning and Zoning Commission. In the event of a conditional approval, the Council shall require the developer to resubmit a Plat showing the changes required.

Approval of a Preliminary Plat by the Planning and Zoning Commission and the City Council is tentative only, involving merely the general acceptability of the layout of the proposed subdivision as submitted.

202.11 Preliminary Plat Expiration. The Preliminary Plat shall expire one year from the date of approval by the City Council. Where approval has expired, the entire process must begin anew, unless a time extension is granted by the City Council.

203 Final Plat

203.1 Submittal, Scheduling and Notice. The developer shall submit 15 full size and 10 11x17 sized copies of a Final Plat and five copies of the Final Improvement Plans to the City Clerk within one year after Preliminary Plat approval by the City Council, and shall post the required retained personnel fee prior to the Planning and Zoning Commission meeting at which it is to be heard. Where the Preliminary Plat shows the development to be phased, then the Final Plat for each phase shall be submitted within one year of approval of the Final Plat for the previous phase, unless such time is extended by mutual consent.

The City Clerk will distribute the Final Plat to the appropriate City staff and retained consultants for their review and shall schedule the Final Plat for a meeting of the Planning and Zoning Commission within a minimum of 30 days after all required documents have been received.

The Developer will notify the individuals and organizations listed in Section 202.3 of this Ordinance of the date time and place of the meeting when the Final Plat will be considered. He shall furthermore provide the City Clerk and City Attorney with an affidavit stating that each of the following individuals and organizations was notified by U.S. Mail, certified mail, return receipt requested and provide U.S.P.S. documentation from the mailing indicating the address to which each notice was sent.

203.2 Information Required. Except where the City Administrator specifically provides otherwise, the final plat shall contain at least the following information:

A. Identification and description
- (1) Proposed name of development;
- (2) Location by township, section, range;
- (3) Legal description;
- (4) Name and address of developer and certification by registered land surveyor;
- (5) Scale 1 inch = 100 feet required, date and north arrow;

B. Property information
- (6) Boundary of tract, property lines of lots, street right-of-way, dedicated areas and easements based on an accurate traverse with angular and lineal dimensions (in feet);
- (7) Any municipal, public utility or other easements, including drainage, stormwater detention, road construction, and pedestrian easements;
- (8) Centerlines of streets with radii, internal angles, points and curvatures, tangent, bearings and lengths of all, arcs. Names of all streets within and adjoining the plat lines and lot widths with linear dimensions;
- (9) Accurate location of at least two concrete monuments constructed and placed as required by the Plat Act (765 ILCS 105/0.01 et seq.);
- (10) All districts, such as library, elementary school, junior high school, high school, fire protection, etc.;
- (11) Legal description for areas to be dedicated or reserved for public or common uses with nature of ownership and purposes of same indicated;
- (12) Appropriate certificates as required by this Ordinance;
- (13) Historic districts and historic Landmarks properties;
- (14) State plane coordinates; and
- (15) Any variation from the City Municipal Code.

203.3 Supporting Documents. The developer shall submit 5 copies of the following supporting documents, as herein described, with the required Final Plat submission.

A. Final Engineering Plans, shall at a minimum consist, of the following:
- (1) Title Sheet;
- (2) Project Specifications and General Construction Notes;
- (3) Geometric Plan;
- (4) Grading Plan, which includes the street paving plan, all storm sewer lines and structures, stormwater retention/detention facilities, erosion control measures, floodplain and wetland protection measures;
- (5) Lighting Plan, which includes a photometric plan that indicates the layout of lighting fixtures, the maximum and minimum light levels, and underground conduits and cable for off-street parking and/or public street lighting facilities;
- (6) Street Plan and Sections;
- (7) Construction Details;

(8) Sanitary and Stormsewer profiles; and
(9) Soil Erosion and sedimentation plan.

B. Drainage Overlay. A reproducible overlay drawing, as required by the Plat Act (765 ILCS 105/0.01 et seq.).

C. A detailed statement by the subdivider setting forth the nature, kind, character, and extent of all improvements that will be constructed within the subdivision.

D. A statement by a professional engineer registered in the State of Illinois giving a detailed estimate of the total cost of construction for all proposed improvements.

E. Completed copies of all permit application forms (IEPA, IDOT, Illinois Department of Natural Resources, US Army, etc.)

203.4 Staff and Consultant Reports. At least five days prior to the meeting date, the City staff and appropriate retained consultants shall file a report with the City Clerk who shall distribute copies to the Planning and Zoning Commission, other appropriate city staff, officials and the developer.

203.5 Planning and Zoning Commission Meeting and Recommendation. The Planning and Zoning Commission shall hold a regularly scheduled public meeting to the review the proposed Final Plat. The owner or his designated representative is required to be present at this meeting.

The Final Plat shall be consistent with the Preliminary Plat and meet all applicable City requirements.

The Planning and Zoning Commission shall recommend denial, approval, or approval with amendments, conditions and/or restrictions within 30 days from the date of the completed application (including all supporting data), unless such time is extended by mutual consent.

203.6 Planning and Zoning Commission Report. A least five days prior to the City Council meeting, the Planning and Zoning Commission, with the assistance of City staff and retained consultants, shall prepare a report of their findings and recommendation for action by the City Council. If recommending denial, the Planning and Zoning Commission shall include in their report a written statement setting forth the reasons for disapproval and specifying the aspects in which the proposed plat fails to conform to this Ordinance and with the intent of the Comprehensive Plan.

203.7 Revised Final Plat Submission. The Developer shall incorporate changes recommended by the Planning and Zoning Commission and shall submit 15 full size and 10 11x17 sized copies of the revised Final Plat at least 15 days prior to meeting with the City Council. After all required documents have been received, the City Clerk shall schedule the Final Plat for a meeting of the City Council.

203.8 City Council Meetings and Action. The Developer shall submit 15 full size and 10 11x17 sized copies of the revised Plat addressing conditions placed on approval by the Planning and Zoning Commission.

The City Council shall accept, accept with modifications and/or conditions, remand to Planning and Zoning Commission for further review, or reject the Final Plat within 30 days of its regularly scheduled meeting following the action of the Planning and Zoning Commission. If the proposed Plat is approved, the City Clerk shall attach a certified-copy of the order or resolution of approval to a copy of the Plat. If the proposed Plat is disapproved, the order or resolution shall state the reasons for the disapproval.

203.9 Final Plat Expiration. A Final Plat which has not been recorded within six months after its approval by the City Council shall have no validity and shall not thereafter be recorded.

203.10 Signature on Final Plat. After a Final Plat has been approved by the City Council, the Developer shall obtain signatures from all required personnel, as required in Article 8.

203.11 Recording of Final Plat. When all signatures required on the Plat have been obtained, the Developer shall submit the Plat to the City Clerk. The City Clerk shall then present it to the County Recorder for recording and shall pay all recording fees.

204 PLATS OF VACATION

204.1 Submission of Plats of Vacation. A Developer wishing to vacate all or part of an existing Plat shall submit 12 copies of the Plat to the City Clerk and post the required retained personnel fee.

The Developer shall provide the clerk with an affidavit stating that each individual or organization has been notified by U.S. Mail, certified mail, return receipt requested and provide the Clerk with U.S.P.S. documentation from the mailing. The City clerk shall deliver a copy of the Plat to the City Attorney and City Engineer.

204.2 Plat of Vacation Distribution. The Developer shall notify the following individuals and organizations of the meeting date and time at which the Plat of Vacation will be considered.

A. City Attorney;
B. City Engineer;
C. Fire Protection District;
D. Utility Company Representatives:
E. Cable Television;
F. Electric;
G. Gas;
H. Telephone; and
I. Sewer and Water Utilities.

The Developer shall provide the clerk with an affidavit stating that each individual or organization has been notified by U.S. Mail, certified mail, return receipt requested and provide the Clerk with U.S.P.S. documentation from the mailing.

204.3 Written Approval of Easements. It shall be the developer's responsibility to contact the utility companies and the CATV company to obtain their written approval of any vacation of utility easements.

204.4 Review of Plat of Vacation by Planning and Zoning Commission.
The approval of the Plat of Vacation by the Planning and Zoning Commission is required prior to submission of the Plat to the City Council. If a Plat has been conditionally approved by the Planning and Zoning Commission, all conditions of approval must be met before the Plat of Vacation may be submitted to the City Council. The Planning and Zoning Commission shall approve or deny the proposed Plat of Vacation within 30 days of the completed application (including all required submissions).

The owner or his designated representative is required to be present when the Planning and Zoning Commission reviews the Plat of Vacation.

204.5 Planning and Zoning Commission Approved of Plat of Vacation Expiration. Approval of a Plat of Vacation by the Planning and Zoning Commission shall expire one year from the date of approval. When such approval has retired, the Planning and Zoning Commission must again review and approve the Plat of Vacation before submission of the Plat to the City Council.

204.6 Review by the City Council. Within 30 days of its approval by the Planning and Zoning Commission, a Plat of Vacation may be scheduled for approval by the City Council in accordance with its adopted agenda procedures. Twenty copies of the Plat of Vacation should be submitted ten days prior to City Council meeting.

204.7 Recording of Plat of Vacation. After a Plat of Vacation has been approved by the City Council, the Developer shall obtain all necessary signatures. When all signatures required on the Plat have been obtained, the Developer shall submit the Plat to the City Clerk. The City Clerk shall then present it to the Recorder for recording.

204.8 City Council Approved Plat of Vacation Expiration. A Plat of Vacation which has not been submitted by the City Clerk within six months after its approval by the City Council shall have no validity, and shall not thereafter be recorded.

205 Procedure for Resubdivision

The procedure for resubdivision of land in the City shall be the same as for initial platting.

206 Plat Corrections and Addenda

All minor Plat corrections and addenda shall be reviewed by the City Engineer before being presented for recording. Any change to the Plat that in the opinion of the City Engineer represents a significant departure from the approved Plat shall be first approved by the City Council prior to recording.

Marengo Subdivision Process

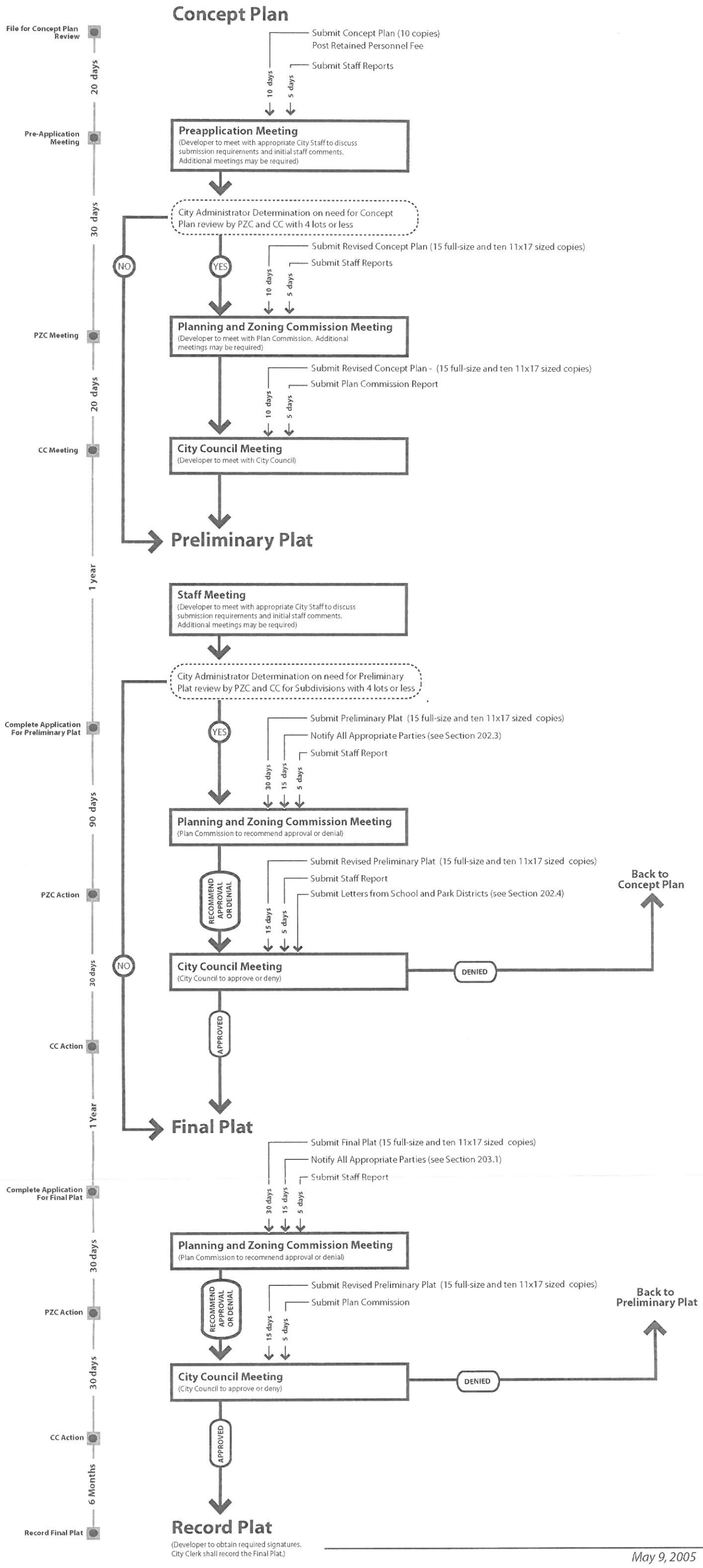

Article 3
DESIGN REQUIREMENTS

301 CONSERVATION DESIGN SUBDIVISIONS

301.1 Purpose. Conservation design is intended to encourage more efficient use of land and public services through unified development that is principally intended to protect biodiversity, conserve community resources, preserve natural areas, and protect the health and safety of the community. This Section establishes reasonable standards and criteria to permit sufficient flexibility in the development of subdivisions, to maximize the achievement of conservation design objectives, and to promote the following purposes:

A. To guide the future growth and development of the community consistent with the City's Comprehensive Plan;
B. To preserve the rural character of the community through the preservation of open space and sensitive natural resources;
C. To provide commonly-owned open space areas for passive and/or active recreational uses by residents of the development and, where specified, the larger community;
D. Protect and enhance biodiversity;
E. Minimize development on and destruction of sensitive natural resource areas and wildlife habitats;
F. Reduce the quantity and improve the quality of stormwater runoff from the new development;
G. Minimize impervious surface area;
H. Reduce soil erosion potential;
I. Increase future property value;
J. Create livable and sustainable communities.

301.2 Density. The maximum density shall be that of the underlying or pre-existing zoning, or as described in the City of Marengo Comprehensive Plan for unincorporated areas in dwelling units per acre. Dwelling units per acre is determined by dividing 43,560 by the minimum lot area provided in the Zoning Ordinance. Minimum lot area shall not apply to conservation subdivisions. Density in a conservation subdivision shall be based on the net site area of the overall project area by deducting the following:

A. Any public right-of-way within the project boundary existing at the time the development plan is submitted;

B. The area of land within a floodplain, designated wetland, or existing water body that exceeds the minimum acreage required for restricted open space. Where floodplains and wetlands overlap, they shall only be counted once.

C. Stormwater detention and right-of-way dedication.

The net buildable area multiplied by the dwelling units per acre (as described above) equals the number of units allowed within a conservation subdivision.

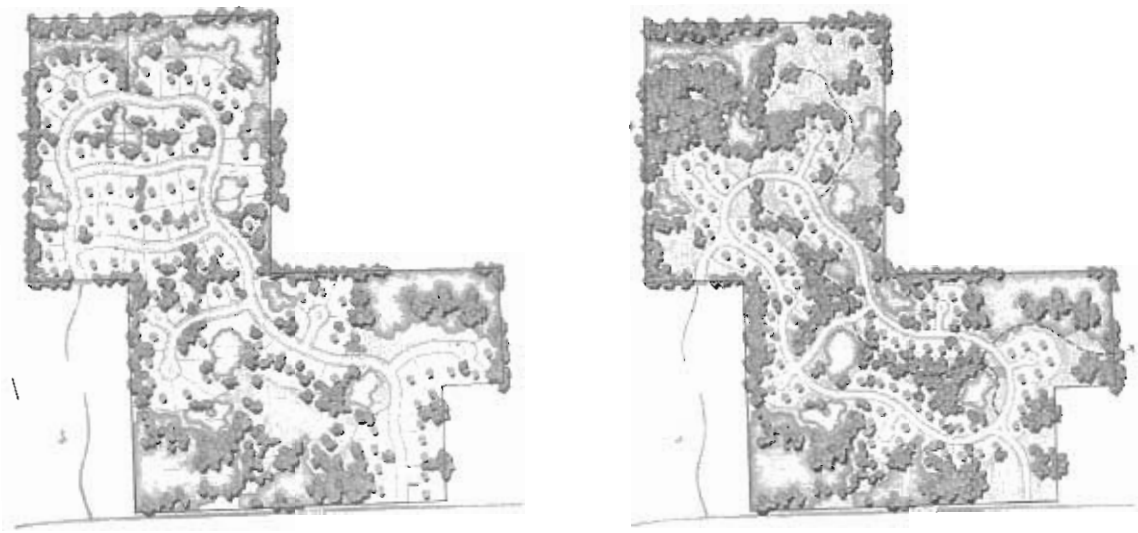

Figure 1 - Conventional Subdivision Design (left) vs. Conservation Design (right)

301.3 Lot Clustering Siting Standards.

A. Lots are encouraged to be grouped into clusters. It is recommended that each cluster contain between 5 and 20 units.

B. Clusters shall be arranged to minimize negative impacts on the natural, scenic, and cultural resources of the site and conflicts between incompatible uses.

C. Clusters shall avoid encroaching on rare plant communities, high quality sites, or endangered species identified by the Illinois Department of Natural Resources.

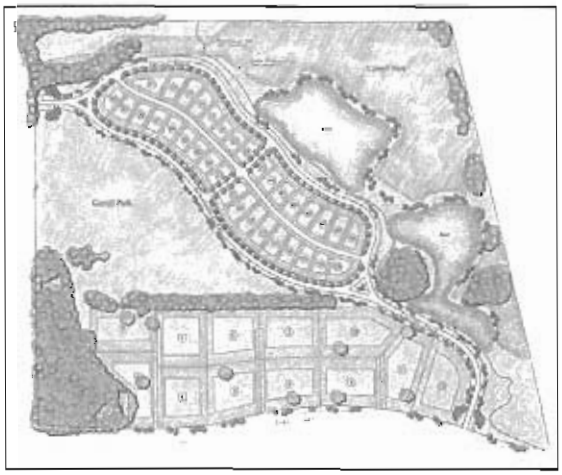

Figure 2. An example of lot clustering

D. Whenever possible, open space shall connect with existing or potential open space lands on adjoining parcels and local or regional recreational trails.

301.4 Open Space. At least 40% of the net site acreage of a conservation subdivision shall be set aside as open space. The open space counted toward this set-aside shall not include parkways, landscape islands, wetlands, floodplains, or other inherently unbuildable areas, and should meet the definition of open space provided in Article 9 of this Ordinance.

301.5 Curb and Gutter/Vegetated Swales. All streets with lot frontages of 100 feet or less must provide enclosed drainage and curb and gutter. The use of swales vegetated with native materials is allowed for streets with lot frontages greater than 80 feet.

301.6 Sidewalks/Walkways.

A. Sidewalks or walkways are required on both sides of street rights-or-way, unless there are no adjacent residential lots, in which case sidewalks are only required on one side of the street. Sidewalks must be separated from moving traffic lanes.

B. Walkways shall be provided to connect residential areas to common open space areas and to provide convenient pedestrian access throughout the conservation development and from the conservation development to other areas of the community.

C. When the proposed walkway system provides pedestrian access equal to or better than sidewalks along street rights-of-way, sidewalks along public streets are not required.

301.7 Street Light Spacing. Street lights shall be provided at every street intersection so as to adequately light the intersection. No maximum or minimum street light spacing is required for conservation subdivisions. (Also see Section 310.4)

301.8 Natural Area, Buffer Protection and Conservation. Natural areas and buffers shall be preserved or restored on the site and will include native vegetation, wetlands, natural floodplain storage, or other valuable environmental or biological resources in accordance with the Natural Area Protection and Management Plan.

A. An area designated for natural area and buffer protection purposes may be:

   (1) Preserved or restored to its natural state;
   (2) Designed and intended for the passive use and/or enjoyment of residents of the proposed development, or
   (3) Preserved in order to expand and extend the usefulness of existing preserved open space and natural areas.

B. Dedicated buffers and natural areas shall be designed and located to conserve significant natural features located on the site.
   (1) A 10 foot conservation easement buffer shall be provided for all lots where the rear yard areas abut a conservation area owned or maintained by the McHenry County Conservation District. The buffer easement shall consist of dense native vegetation, fence, or berm to create a physical barrier between the residential use and Conservation District property.

C. Dedicated natural areas shall be interconnected with open space areas, greenways, and trails on abutting parcels where possible and appropriate.

Figure 3 - Examples of the preservation and conservation of natural features and open space in conservation design

302 Traditional Neighborhood Design Subdivisions

302.1 Purpose. Traditional neighborhood design (TND) is a concept and practice that focuses on the creation of mixed use pedestrian oriented neighborhoods, similar to those found in the traditional urban core of Marengo. While TND subdivisions may support a mix of land uses, they are intended to be comprised primarily of single-family residential uses. A TND Neighborhood:

A. Is compact;
B. Is designed for the human scale;
C. May provide a mix of uses, including residential, limited commercial, civic, and open spaces in close proximity to one another within the neighborhood;
D. Provides a mix of housing styles, types, and sizes;
E. Incorporates a system of relatively narrow, interconnected streets with sidewalks, bikeways, and transit that offer multiple routes for motorists, pedestrians, and bicyclists;
F. Retains existing buildings with historical features;
G. Incorporates significant environmental features; and
H. Is consistent with the City of Marengo's Comprehensive Plan.

Figure 4 – Elements of Traditional Neighborhood Design, such as human scale, density, mix of housing styles, and sidewalks

302.2 Street Layout. Streets should generally be laid out in traditional grid pattern, maintaining the existing street grid, where present, and restoring any disrupted street grid where possible.

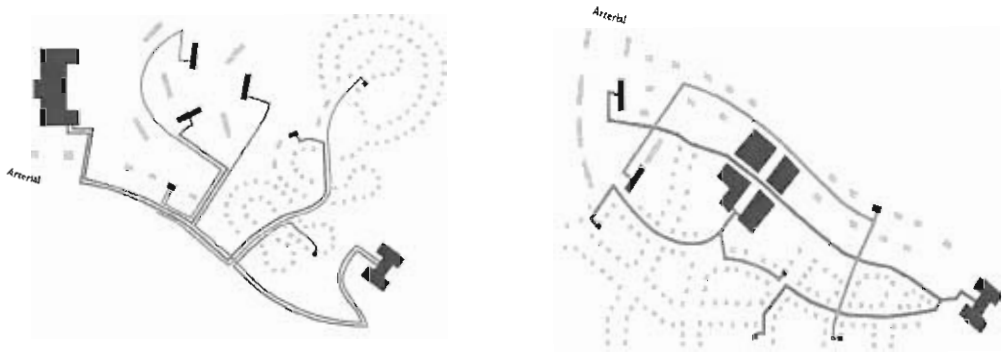

Figure 5 - Conventional subdivision design and street layout (left) and Traditional neighborhood design and street layout (right)

302.3 Blocks. Blocks shall be no less than 350 feet and no greater than 650 feet in length. Block widths should generally range between 250 and 400 feet in depth.

302.4 Sidewalks. Sidewalks shall be provided on both sides of all streets within TND subdivisions (widths shall be consistent with Table 303.17).

302.5 Crosswalks. Crosswalks are required at all collector and arterial intersections with sidewalks. Crosswalks shall be well lit and clearly marked with contrasting paving material or striping.

302.6 Street Light Spacing. Street lighting shall be provided along all streets within a TND subdivision. Generally more, smaller lights, as opposed to fewer, high-intensity lights, should be used. Street lights should be installed on both sides of the street at alternating intervals between 75 to 100 feet. The final spacing between street lights shall be based on a City approved photometric plan. The minimum light level for pedestrian areas shall be 0.2 footcandles. (Also see Section 310.4)

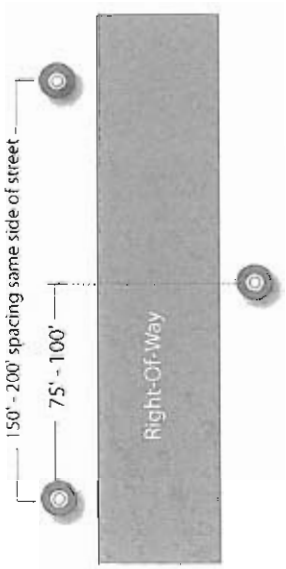

Figure 6 - Street Light Spacing

302.7 Open Space. At least 15% of the net buildable acreage of TND subdivisions must be open space. The open space counted toward this set-aside shall not include right-of-ways, parkways, landscape islands,

wetlands, floodplains, or other inherently unbuildable areas, and should meet the definition of open space provided in Article 9 of this Ordinance. All residences should be located within ¼ mile of common open space.

303 STREETS

303.1 Classification of Streets. The developer shall classify each street shown on the Plat of Subdivision as to its functional use as follows:

A. *Arterial Street.* An arterial street is a major street that serves to circulate traffic into, out of, or around the City, and which carries, or is intended to carry high volumes of traffic.

B. *Collector Street.* A collector street is a street that serves to carry traffic from local streets to other collectors or arterial streets. It may provide limited access to some abutting properties.

C. *Local/Traditional Street.* A local street is a street whose primary function is to provide access to abutting properties within traditional subdivision.

D. *Business Access and Industrial Access Streets.* Streets providing access to commercial or industrial property shall be classified as "Business Access Streets" or "Industrial Access Streets," respectively.

E. *Alley.* An alley is a public or private way permanently reserved as a secondary means of access to abutting properties.

303.2 Cul-de-sacs. Cul-de-sacs are prohibited. Based on unique site conditions, the City Council may allow cul-de-sacs consistent with standards set forth in Sections 303.17 and 303.18. Preferred alternatives to traditional cul-de-sacs are provided to the right and below.

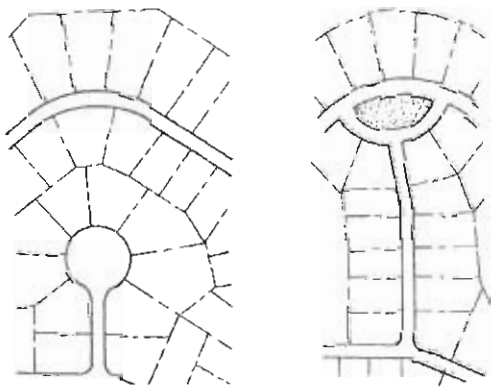

Figure 7 - Typical cul-de-sac (left) vs. crescent layout (right). The crescent design (right) has the advantage of several stop signs, reduced driving speed, and discouraged through-traffic. Source: APA/PAS Report 487/488, Crossroads, Hamlet, Village, Town: Design Characteristics of Traditional Neighborhoods, Old and New.

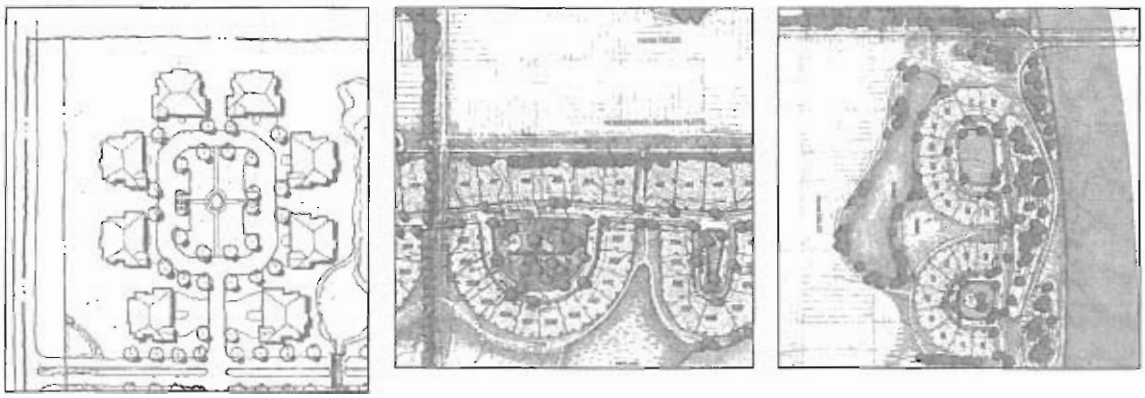

Figure 8 - Examples of alternatives to typical cul-de-sac street design

303.3 Continuing Streets. All existing streets which terminate at the boundary of a proposed subdivision shall be continued into the subdivisions and be incorporated into the street pattern.

303.4 Dead-End Street. Dead-end streets are prohibited. However where a street is intended to extend beyond the perimeter of the subdivision to provide access to adjoining undeveloped land, a temporary "T-turnaround" may be provided. T-turnarounds may be no longer than one lot in length and driveway access shall not be allowed to or from it.

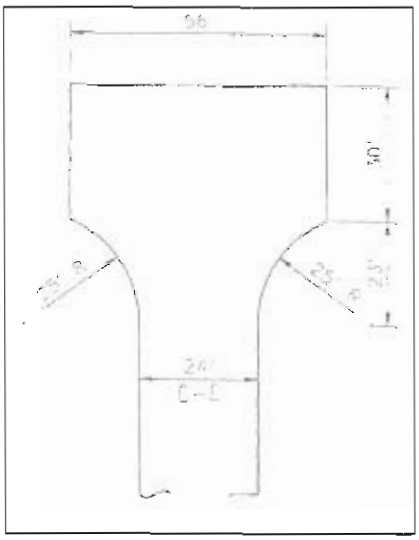

Figure 9 – T-turnaround illustration

303.5 Access to Adjacent Property. Access to adjacent properties in the form of stubbed roads is required. However, access shall not be required on a side of a tract where physical barriers would prevent a street from practically being continued, as where the boundary of the tract is a creek which could be crossed only with a bridge, or a steep slope which could not be graded to an acceptable slope for the street intended.

303.6 Alleys. Alleys are permitted in traditional design neighborhoods and in conservation design neighborhoods when deemed appropriate by the Planning and Zoning Commission. Alleys are required for single-family detached units with widths of 60 feet or less. Alleys must provide a minimum 16 foot wide vehicular pavement width. No building or accessory structure shall be located within 10 feet of the alley pavement. Alleys shall not terminate in dead ends and shall not intersect with arterial or collector streets.

Figure 10 – Example of permitted alley (left), prohibited alley without setbacks (right)

303.7 Half Streets. Half streets are prohibited.

303.8 Private Streets. Private streets are prohibited.

303.9 Medians. The developer may elect to build streets, or portions thereof, with a landscaped median. See Sections 303.17 and 303.18 for requirements. Shade trees shall be planted no greater than 40 feet on center. Supplemental landscaping may be required. Cross-sections shall be widened as necessary.

303.10 Street Names. Each street shall have a unique name which will not duplicate any other in the City or adjoining township. Proposed streets which are in alignment with or join an existing street shall bear the name of the existing street. A loop street shall have only one street name for the entire loop. The developer should consider naming proposed streets, which connect to Historic Route 20, for the original settlers of the subject property. Street names are to be approved by the City of Marengo.

303.11 Intersection of Streets. Streets shall be designed to intersect as nearly as possible at right angles. The minimum allowable angle of intersection of two streets is 70 degrees. Whenever possible, the intersection of more than two streets shall be avoided. The first 100 feet into the intersection shall be limited to a maximum grade of two percent.

303.12 Street Jogs. Street jogs with centerline offsets of less than 150 feet shall be prohibited.

303.13 Topography and Layout. Streets shall be approximately related to the topography. Grades of streets shall conform, to extent practical, to original contours.

303.14 Sight Distances. Sight distances shall be consistent with the IDOT Local Road Manual.

303.15 Reverse Curves. - Reverse curves on arterials and collectors will be separated by a straight roadway section consistent with standards set out in the IDOT Local Road Manual.

303.16 Return Radii at Intersections and Corner Lots. Return radii at all intersections shall be measured to the back of curb with curb and gutter, and to the edge of pavement without curb and gutter. See Sections 303.17 and 303.18.

Table 1 - Minimum Design Requirements for Urban/Traditional Neighborhood Subdivision Streets

Standard	Arterial	Collector	Local (Traditional)	Business & Industrial Access
Minimum Right-of-way	100 feet	70 feet	60 feet	70 feet
Travel Lane Width	12 feet each	12 feet each	10 feet each	12 feet
On-Street Parking	Not Allowed	Not Allowed	One or Both Sides 8 feet each	Not Allowed
Median/Turn Lane	18 feet wide, painted and mounted **or** landscaped with curb and gutter	18 feet wide, painted and mounted **or** landscaped with curb and gutter	Optional with City Approval. 18 feet wide if provided, painted and mounted **or** landscaped with curb and gutter	18 feet wide, painted and mounted **or** landscaped with curb and gutter
Pavement Width	24 feet minimum (without median or turning lane)	24 feet minimum (without median or turning lane)	26-28 feet	24 feet (without median or turning lane)
Parkway Width	25 feet on each side	15 feet on each side	10 feet each side	15 feet on each side
Sidewalk	Both sides of the street 4 feet wide, 1 foot from ROW	Both sides of the street 4 feet wide, 1 foot from ROW	Both sides of street 5 feet wide	Both sides of street or one side with bike path.4 feet wide
Curb Radii	35 feet	25 feet	25 feet (10 feet for alley)	35 feet
Bike Lane	Off-Street bike lane required on one side (opposite side of sidewalk). 8-12 feet wide	Off-Street bike lane required on one side (opposite side of sidewalk). 8-12 feet wide	Optional On-Street striped (4 feet minimum)	Optional off-street bike lane.

Table 1 - Minimum Design Requirements for Urban/Traditional Neighborhood Subdivision Streets (cont.)

Standard	Arterial	Collector	Local (Traditional)	Business & Industrial Access
Curb and Gutter	Required M-6.12; B-6.12	Required M-6.12; B-6.12	Required M-6.12; M-3.12; B-6.12	Required M-6.12; B-6.12
Cul-de-sac	Not Allowed	Not Allowed	Allowed by exception only. Maximum length is 500 feet. Minimum bulb ROW diameter is 140 feet and pavement is 100′.	Allowed by exception only. Maximum length is 500 feet. Minimum bulb diameter is 100 feet.
Alley	Not intersecting	Not intersecting	Required for single-family detached units with lot widths of 60 feet or less. Allowed in all other circumstances. 16 feet wide pavement required.	Not Allowed
Horizontal Alignment (Centerline Radius)	467′	467′	250′	467′
Vertical Alignment (Max./Min.)	6%/0.5%	8%/0.5	8%/0.5	6%/0.5%
Pavement Structure	8″ BBC base 4″ N70 Superpave, (2½″ surface, 2½ binder) **or** 8″ PC concrete with wire fabric and 4″ aggregate sub-base	7″ BBC base, 4″ N50 Superpave, (2½″ surface, 2½ binder) **or** 8″ PC concrete with wire fabric and 4″ aggregate sub-base	6″ BBC base 4″ N50 Superpave, (2½″ surface, 2½ binder) **or** 6″ PC concrete with wire fabric and 4″ aggregate sub-base	9″ BBC base 4″ N70 Superpave, (2½″ surface, 2½ binder) **or** 8″ PC concrete with wire fabric and 4″ aggregate sub-base

Notes:
BBC – Bituminous Base Course

Figure 11 - Minimum Design Requirements for Urban/Traditional Arterial Roads

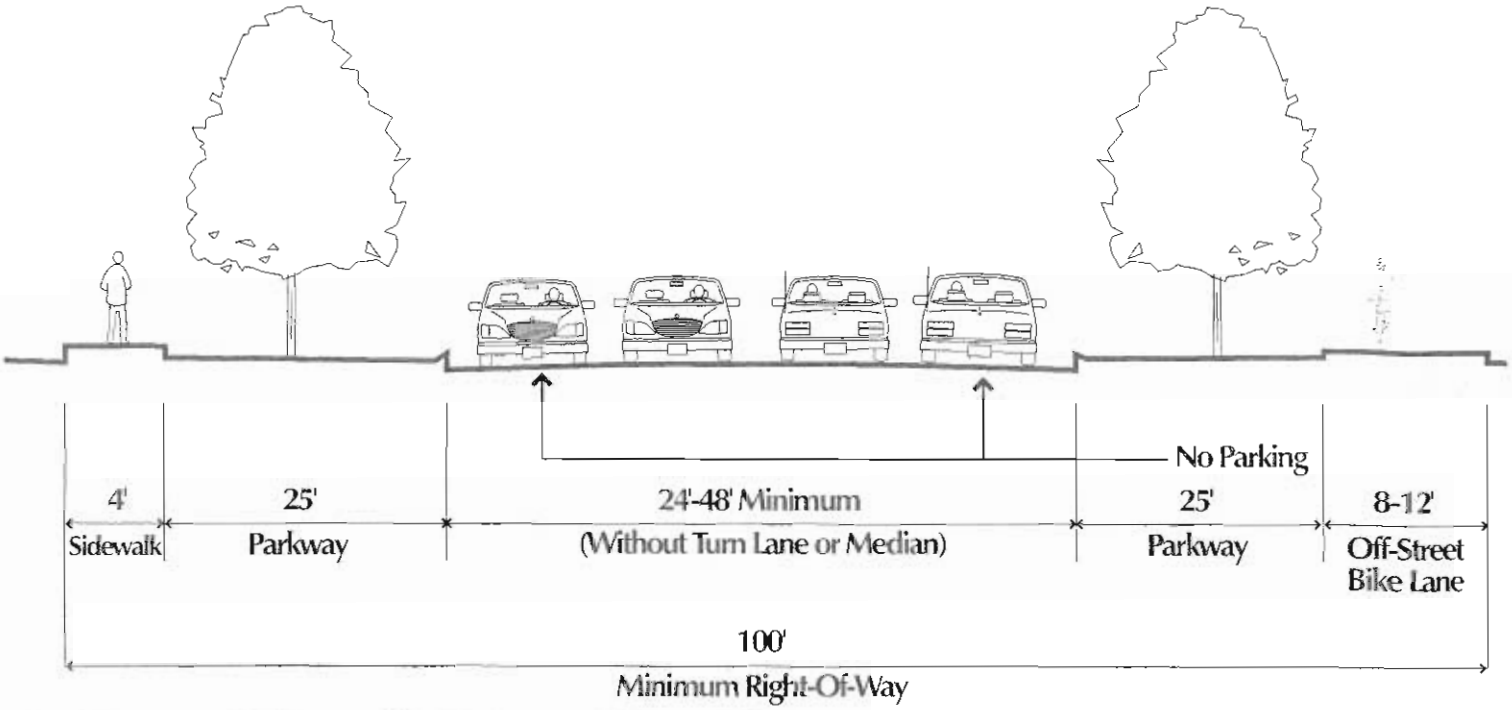

Arterial Road (Urban Section)

Figure 12 - Minimum Design Requirements for Urban/Traditional Collector Roads

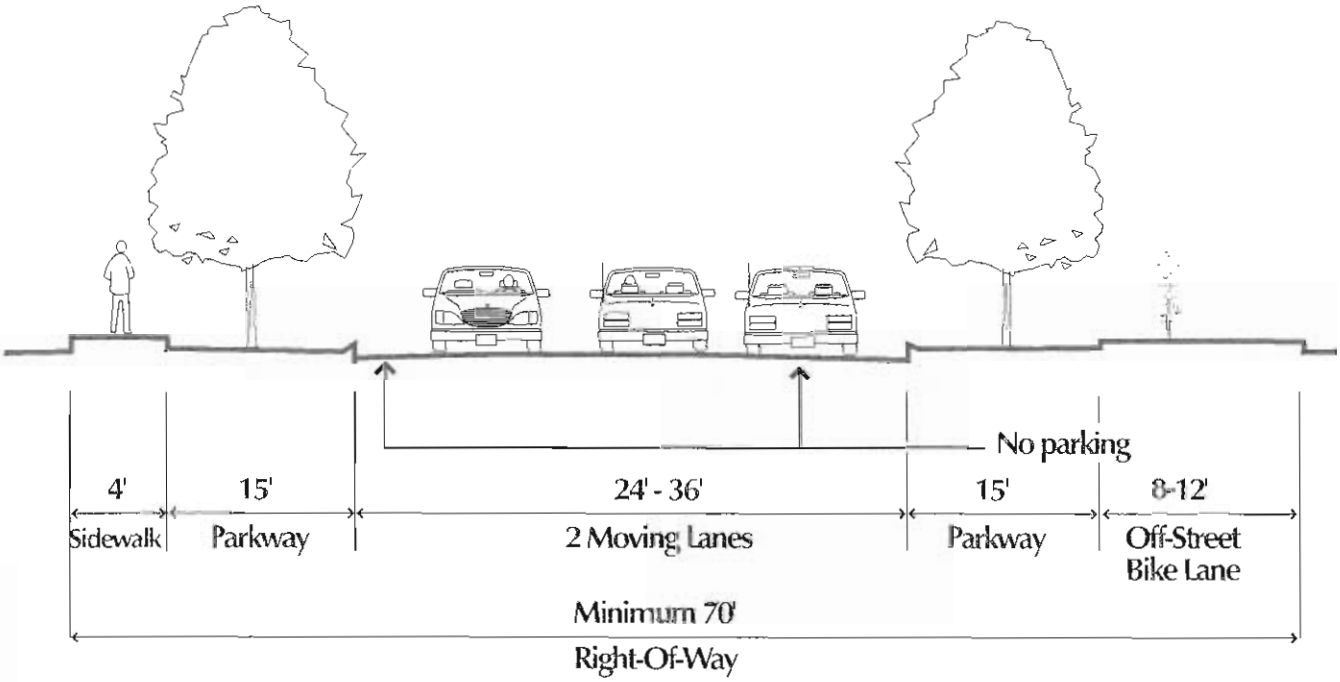

Collector Road (Urban Section)

Figure 13- Minimum Design Requirements for Urban/Traditional Local Roads

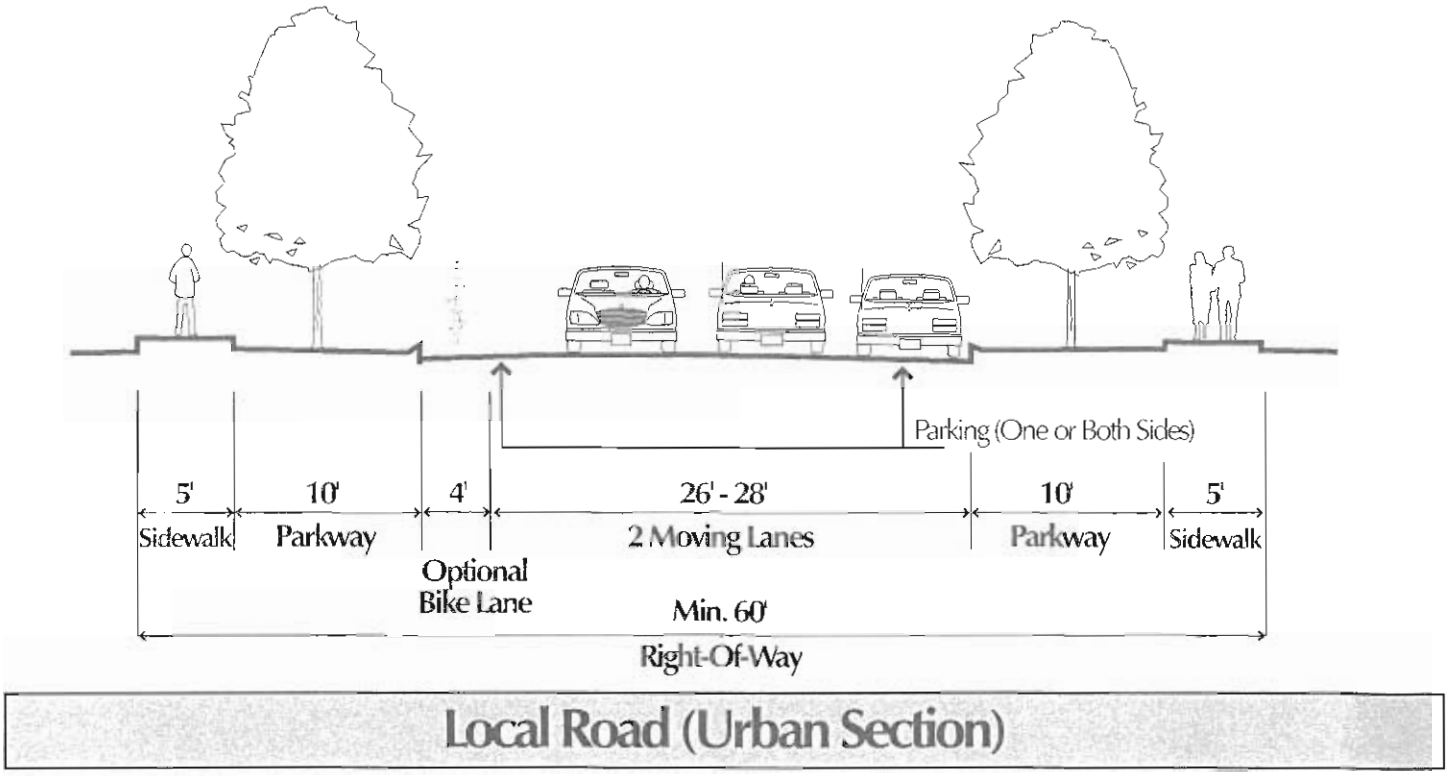

Figure 14 - Minimum Design Requirements for Business and Industrial Access Roads

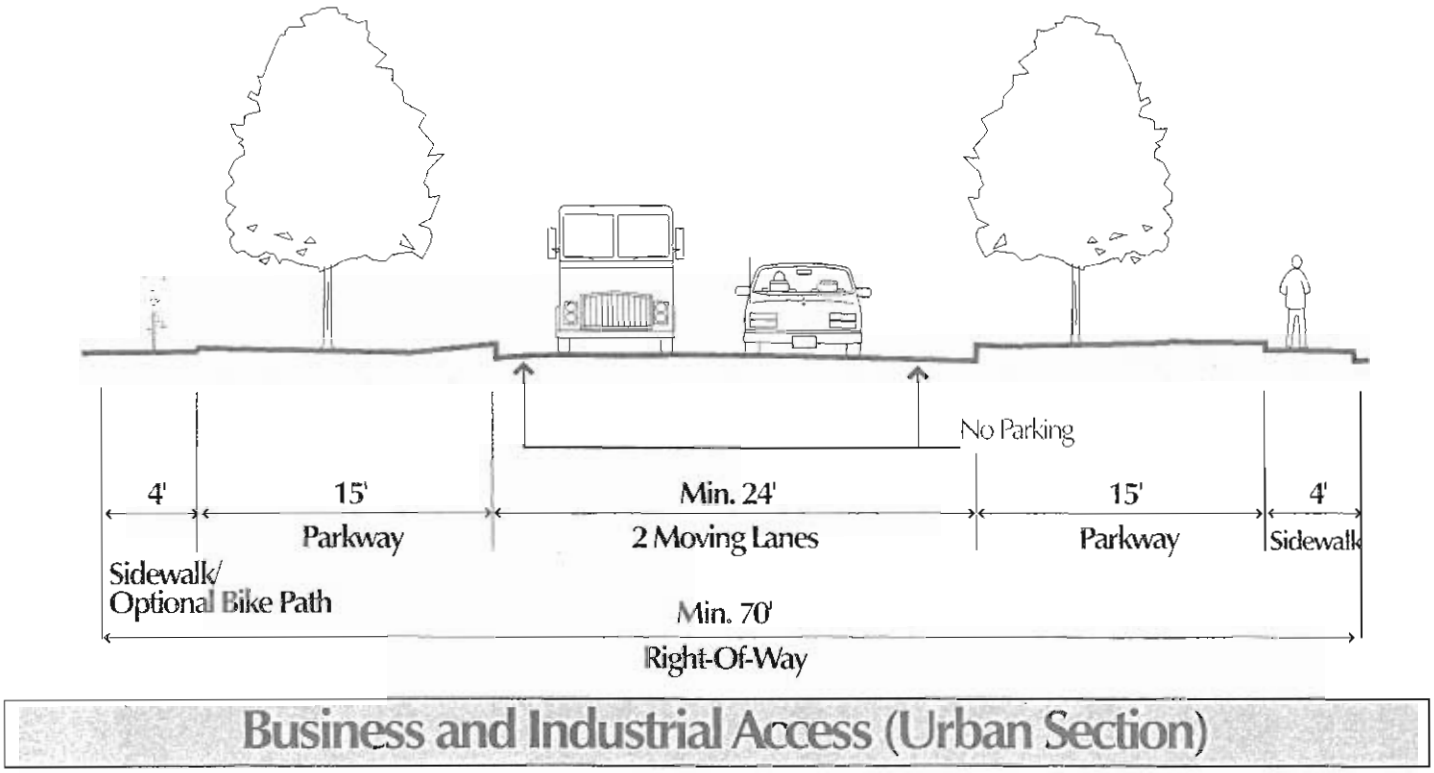

Table 2 - Minimum Design Requirements for Local/Conservation Design for Subdivisions Streets

Standard	Arterial	Collector	Local Street	Business & Industrial Access
Minimum Right-of-way	100 feet	90 feet	70 feet	90 feet
Travel Lane Width	12 feet each	12 feet each	10 feet each	12 feet
On-Street Parking	Not Allowed	Not Allowed	One or Both Sides 8 feet each	Not Allowed
Median/Turn Lane	18 feet wide, Painted and mounted or landscaped with curb and gutter	18 feet wide, Painted and mounted or landscaped with curb and gutter	Optional with City Approval. 18 feet wide if provided.	18 feet wide, painted and mounted, or landscaped with curb and gutter
Pavement Width	24 feet minimum (without median or turning lane)	24 feet minimum (without median or turning lane)	26-28 feet	24 feet (without median or turning lane)
Parkway Width	10-28.5 feet on each side	10-28.5 feet on each side	10 feet each side	10-28.5 feet on each side
Sidewalk	One side of street 4 feet wide, 1 foot from ROW	One side of street 4 feet wide, 1 foot from ROW	Both sides of street unless there is no residential frontage 4 feet wide	Both sides of street 4 feet wide
Curb Radii	35 feet	25 feet	15 feet (10 feet for alley)	35 feet
Bike Lane	Off-Street bike lane required on one side (opposite side of sidewalk). 8-12 feet wide	Off-Street bike lane required on one side (opposite side of sidewalk). 8-12 feet wide	Optional On-Street stripped (4 feet minimum)	Optional.

Table 2 - Minimum Design Requirements for Local/Conservation Design for Subdivisions Streets (cont.)

Standard	Arterial	Collector	Local Street	Business & Industrial Access
Shoulder Width	6 feet on each side	6 feet on each side	4 feet on each side	6 feet on each side
Roadway Ditches (Both Sides)	2′ Depth	2′ Depth	2′ Depth	2′ Depth
Maximum Slopes	3:1 4:1	3:1 3:1	3:1 3:1	3:1 3:1
Cul-de-sac	Not Allowed	Not Allowed	Allowed by exception only. Maximum length is 500 feet. Minimum bulb diameter is 100 feet.	Allowed by exception only. Maximum length is 500 feet. Minimum bulb diameter is 100 feet.
Alley	Not intersecting	Not intersecting	Allowed 16 feet wide pavement	Not Allowed
Curb and Gutter	If required by City, use standards set in Table 1 of this Ordinance	If required by City, use standards set in Table 1 of this Ordinance	Require in clusters where lot frontages are less than 80 feet	If required by City, use standards set in Table 1 of this Ordinance
Horizontal Alignment (Centerline Radius)	467′	467′	250′	467′
Vertical Alignment (Max./Min.)	6%/0.5%	8%/0.5	8%/0.5	6%/.5%
Pavement Structure	8″ BBC base 4″ N70 Superpave, (2½″ surface, 2½ binder) or 8″ PC concrete with wire fabric and 4″ aggregate sub-base	7″ BBC base, 3″ N50 Superpave (2½″ surface, 2½ binder) or 8″ PC concrete with wire fabric and 4″ aggregate sub-base or 17″ Aggregate Base, 3″ N50 Superpave	6″ BBC base, 4″ N50 Superpave (2½″ surface, 2½ binder) or 8″ PC concrete with wire fabric and 4″ aggregate subbase or 12″ Aggregate base, 4″ N50 Superpave (2½″ Surface, 2½ Binder)	9″ BBC base 4″ N70 Superpave (2½″ surface, 2½ binder) or 8″ PC concrete with wire fabric and 4″ aggregate sub-base

Notes: BBC – Bituminous Base Course

Figure 15- Minimum Design Requirements for Rural Arterial Roads

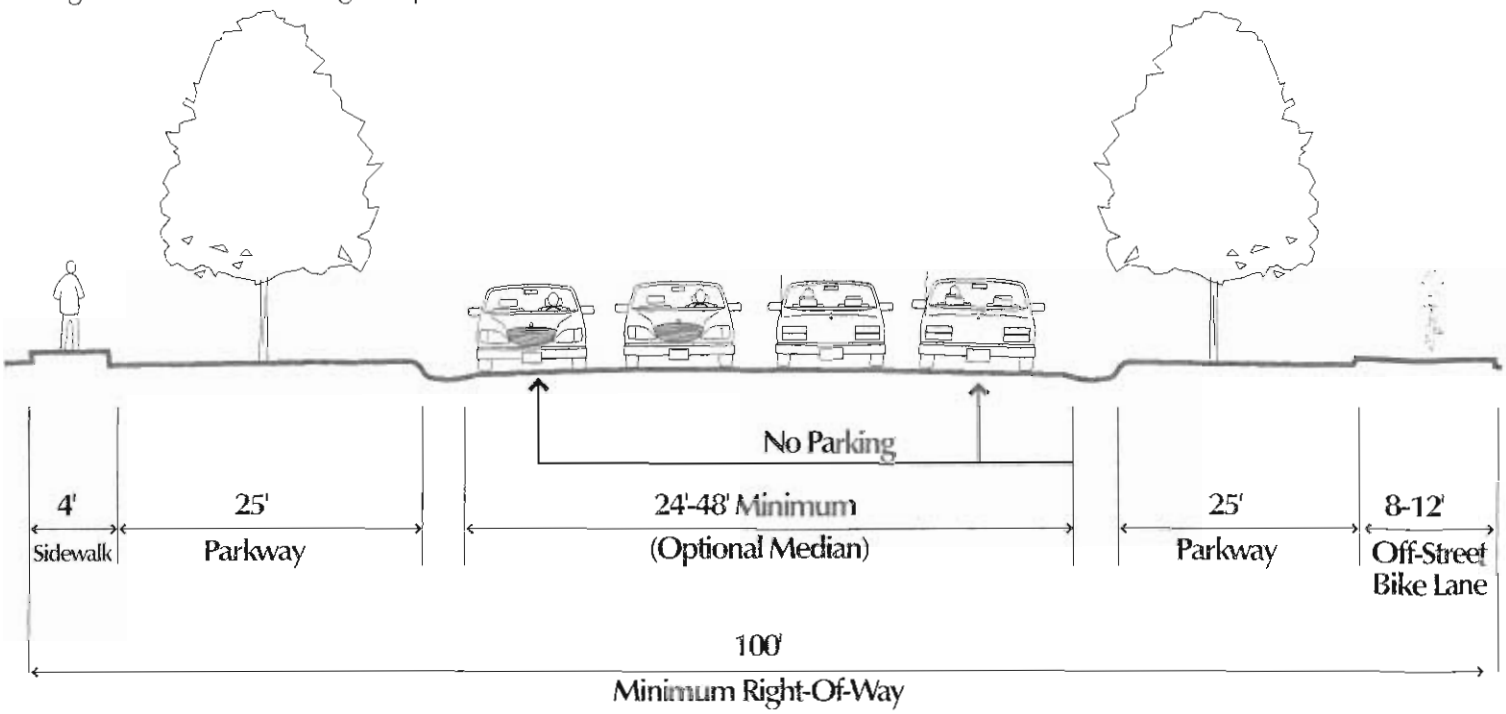

Arterial Road (Rural Section)

Figure 16 - Minimum Design Requirements for Rural Collector Roads

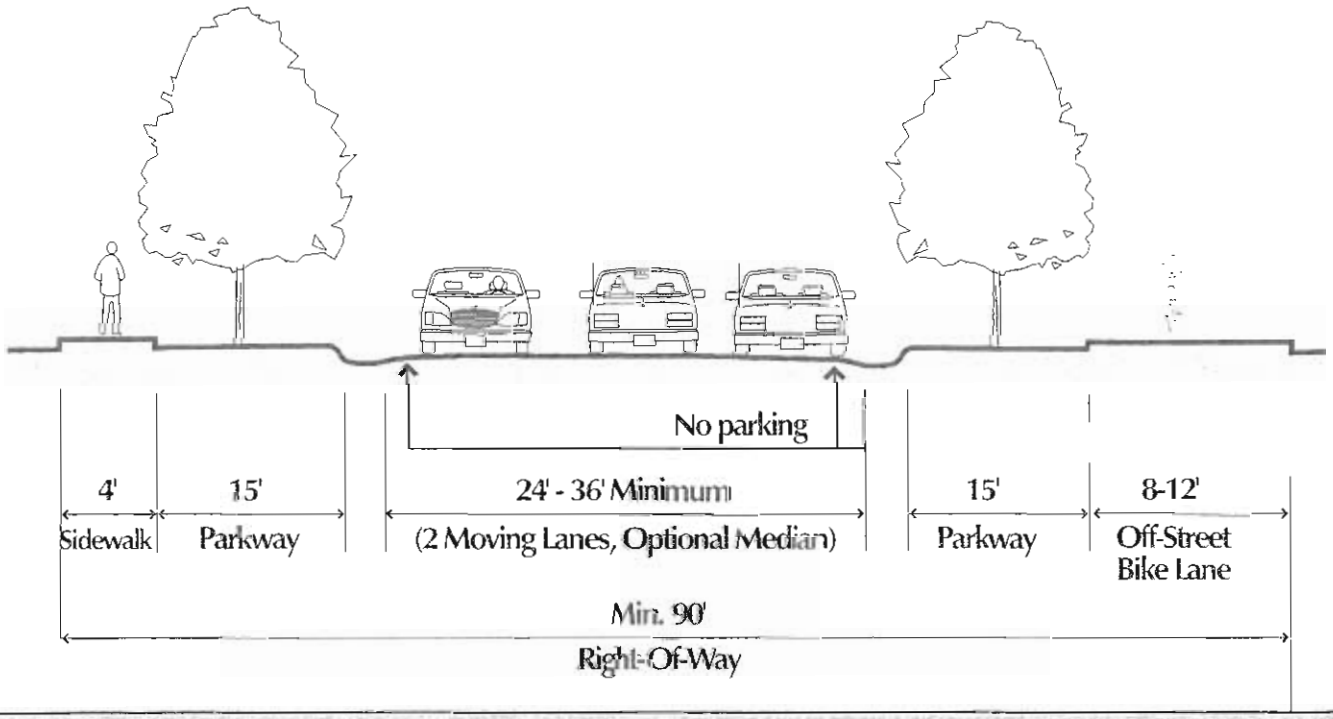

Collector Road (Rural Section)

Figure 17- Minimum Design Requirements for Rural Local Roads

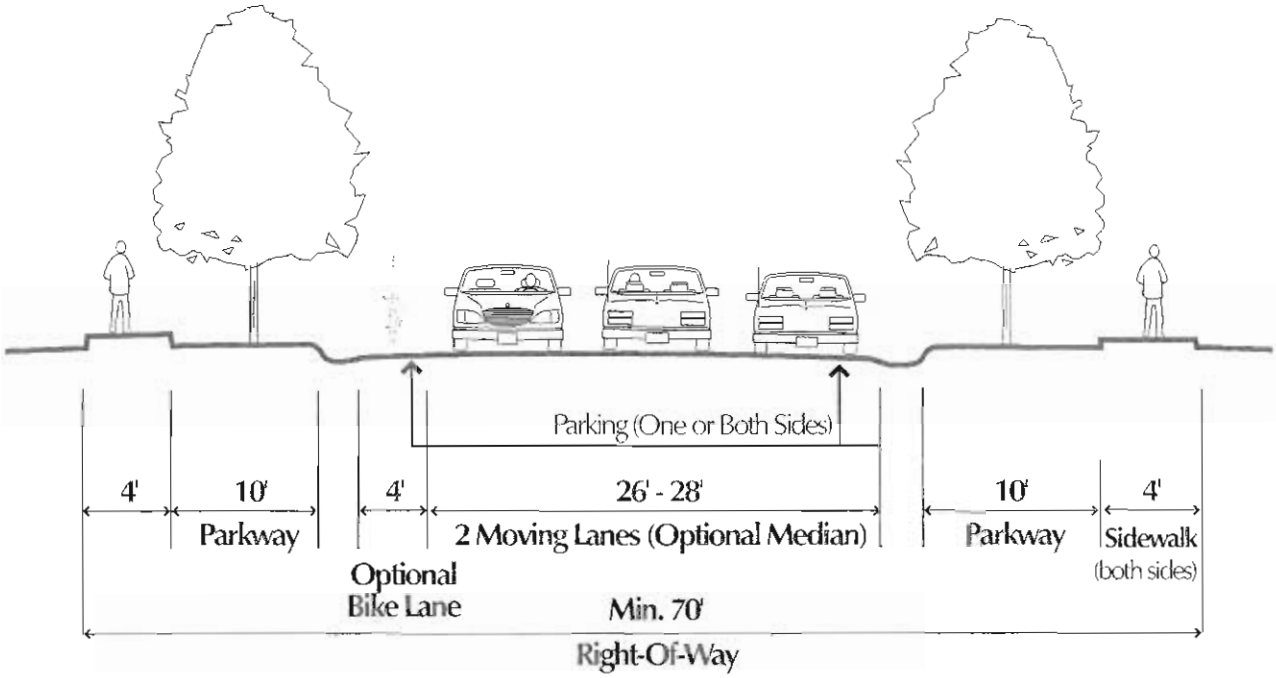

Local Road (Rural Section)

Figure 18 - Minimum Design Requirements for Rural Business and Industrial Access Roads

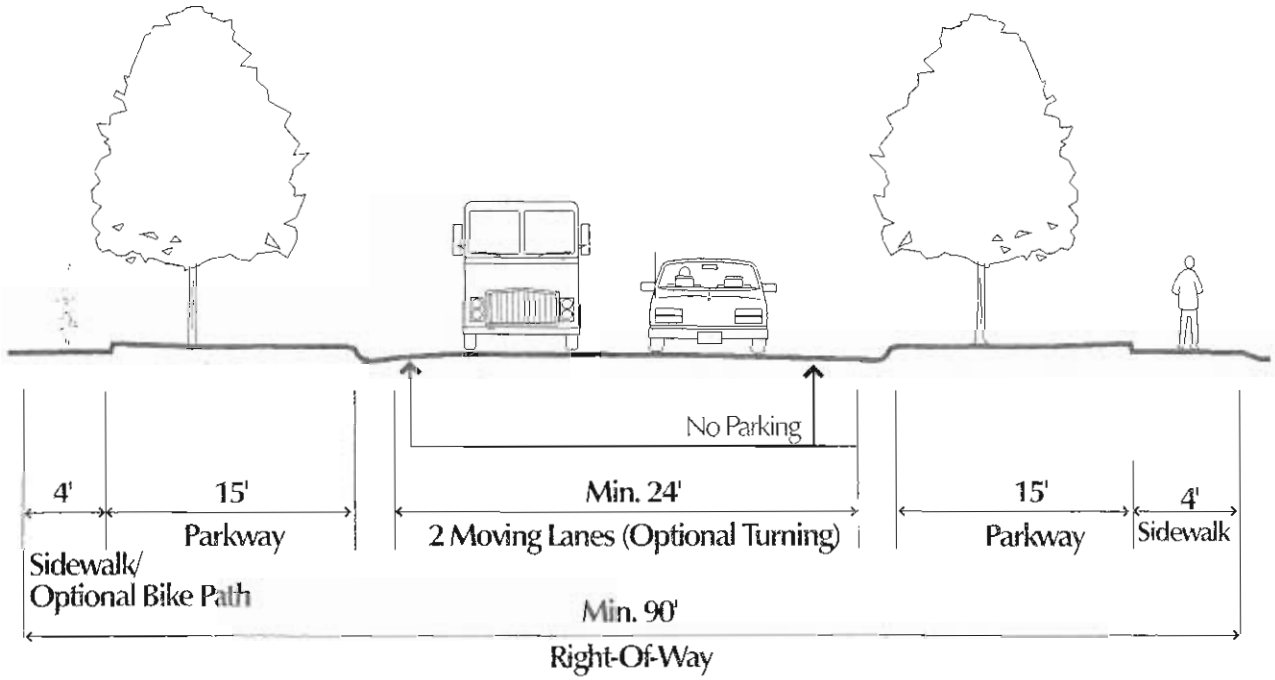

Business and Industrial Access (Rural Section)

304 BICYCLE CIRCULATION

Bicycle circulation shall be accommodated on streets and/or on dedicated bicycle paths. Where feasible, any existing bicycle routes thought the site shall be preserved and enhanced. Facilities for bicycle travel may include 8-12 foot off-street bicycle paths and separate, striped, 4 foot bicycle lanes on streets. Bicycle facilities shall comply with standards contained in the "Guide for the Development of Bicycle Facilities," AASHTO, 1999, as amended.

305 LOTS

305.1 Lot Arrangement. Lots shall be laid out in an efficient and uniform manner to avoid the creation of odd shaped lots and unusable remnants of land

305.2 Auto Access. Every lot shall be provided direct automobile access from a publicly dedicated street or alley. No lot shall provide direct automobile access to arterial or collector streets.

305.3 Double Frontage. Double frontage lots are not permitted, except where lots back onto a collector or arterial street. Such lots must have an additional depth of at least 20 feet in order to allow for an easement sufficient to contain a landscape berm. No fence, temporary, or permanent structure may be provided in within this easement.

305.4 Lot Dimensions. Lot dimensions, areas and building setback lines shall conform to the requirements of the Zoning Ordinance. Corner lots shall be of sufficient size to provide for building setback lines on each street frontage not less than the depth of the required front yard and corner yard specified in the Zoning Ordinance. Additional width or length shall be provided for lots abutting a collector or arterial road, McHenry County Conservation District property, a flood hazard area, wetlands, stream or other similar feature.

305.5 Side Lot Lines. Side lot lines shall be approximately at right angles to the street and extend in a straight line to the rear lot line or radial to street line when it intersects a curved street right-of-way.

306 LANDSCAPING

306.1 Street Trees. A minimum of one deciduous canopy tree per 40 feet of street frontage, or fraction thereof, shall be required (always round up to the nearest whole number when fraction of tree is required). Trees can be clustered and do not need to be evenly spaced, but maximum separation is still 40 feet. Trees should be located in parkways between the sidewalk and the curb. Trees should be located so as not to interfere with underground or overhead utilities. No tree shall be planted within 20 feet of a sanitary or storm sewer manhole or catch basin that is located outside the pavement of the street.

306.2 Plant Type. The developer shall select trees and shrubs that are appropriate for the location. Plant types recommended in Appendix F – Street Tree List are presumed to be appropriate; while those listed as "unacceptable" are presumed inappropriate. In

selecting trees that are not on the list, the developer shall submit information to the City staff for review and approval and shall consider:

A. The general suitability for the climate and soil conditions of this area, especially its hardiness and growth rate,

B. The ease of maintenance and resistance to pests and diseases,

C. The tolerance of urban conditions, particularly road salt and air pollution,

D. The suitability of its branching and foliage, especially the potential for low branching that might interfere with use of the streets by motor vehicles, and

E. The availability from local nurseries.

306.3 Tree Preservation. Tree preservation is addressed in Section 6.24 of the City Code.

306.4 Tree Survey. For the purpose of complying with the above requirements, the developer shall submit with this Preliminary Plat a tree survey showing trees that meet the above requirements. Where the number of trees that would meet the above requirement is so extensive as to impose an unfair burden on the developer, the developer may indicate the wooded areas by showing the approximate perimeter of the trunks constituting such an area and listing the types and sizes of trees within that perimeter. In any event the developer will clearly note any trees that meet the standards set out in 306.2 above and that lie within 25 feet of any right-of-way or within any utility easement.

306.5 Transformer and other Public Utility Ground Mounted Fixtures Screening. All transformers and other public utility fixtures shall be screened from view at the public right-of-way by a dense evergreen hedge at least as tall as the tallest piece of equipment.

307 Natural Area Protection and Management

307.1 Natural Landscape Sensitivity Plan. Priority shall be placed on site design that maintains natural drainage patterns and watercourses. Alterations to natural drainage patterns shall not create flooding conditions or degradation in water quality for adjacent or downstream property. A Natural Landscape Sensitivity Plan (NLS) must be prepared to insure protection of the natural contours and vegetation on a development site.

A. The NLS Plan shall address the following requirements:

(1) Site development shall be fitted to the topography and soil so as to create the least potential for vegetation loss and site disturbance;
(2) Vegetation removal shall be limited to that amount necessary for the development of the site;
(3) Vegetation native to the site or plant community shall be restored in areas affected by construction activities. Temporary vegetation, sufficient to stabilize the soil, may be required on all disturbed areas as needed to prevent soil erosion.

(4) Site design shall minimize the disturbance and loss of vegetation.

B. The NLS Plan shall be drawn to scale and shall indicate the nature and extent of the work and restoration efforts proposed. The NLS Plan shall include the following information:
   (1) Existing contours of the site, as well as finished contours to be achieved by grading. Contours shall be sufficiently detailed to define the topography over the entire site;
   (2) Delineation of areas to be cleared during development activities;
   (3) Restoration of vegetation proposed for all surfaces to be exposed during development activities, including any dredged, filled, or graded areas;
   (4) The location and extent of natural area buffers and method of implementation.

C. All approved measures to mitigate the loss or impact to the natural landscape shall become conditions for approval of the project. In addition, all approved NLS measures shall be carried out prior to final issuance of the building permit or concurrently with the installations of site improvements in the case of a final plat of subdivision.

D. The NLS must be approved by City retained consultants or staff.

307.2 Natural Area Management. Natural areas and buffers in a conservation subdivision may be owned by the City, an association, a land trust or other conservation organization recognized by the City, or may remain in private ownership.

A. *Public Ownership and Management*. The City may, but shall not be required to, accept dedication in the form of fee simple ownership of the designated natural area or buffer.

B. *Homeowners Association*. Restricted natural areas may be held in common ownership by a homeowner's association, community association, or other similar legal entity, or the individual members of a condominium association as tenants-in-common. The City's attorney shall determine that the associations by-laws or code of regulations specify the following requirements:

   (1) Membership in the association shall be mandatory for all purchasers of lots in the development.
   (2) The association shall be responsible for maintenance, control, and insurance of the common areas, included the dedicated natural areas. The association shall notify the City of its officers, providing contact information.

   In the event the Homeowners Association fails to maintain the Common Areas or other areas or items the Association is required to maintain, the City of Marengo shall have the right, but not the obligation to take over management of common areas. Any and all costs incurred by the City of Marengo shall be reimbursed upon written request to the Association. In the event the City exercises its rights pursuant to this provision it shall be granted the rights and remedies described in the declaration of covenants or Homeowners Association bylaws in a form approved by the City.

C. *Creation of Conservation Easements.* A property owner can create a conservation easement restricting the use of the property to protect or preserve its natural features. If the property owners chooses to grant a conservation easement to a public entity, that entity can accept this grant provided that:

(1) The provisions of the conservation easement are acceptable to the City; and
(2) Continuing maintenance and management responsibilities are established.

307.3 Landscape Management and Maintenance Plan (LMMP). A Landscape Management and Maintenance Plan must be prepared to ensure that all common landscape areas that are the responsibility of a homeowner's association are kept in a healthy growing condition in accordance with commonly accepted landscape nursery performance standards for maintenance. The LMMP shall address the following requirements:

A. A qualified consultant will periodically visit the property to monitor the health of the plants, naturalized open space areas and preserved or re-created wetland areas.

B. Debris Management: All trash, brush, grass clippings, debris, etc. shall be periodically removed from the created detention ponds.

C. Stormwater Control Structures: All stormwater control structures and silt basins etc. shall be cleaned out and/or repaired every two weeks to prevent clogging. This will be especially important in early spring and late fall during construction activities. Dammed water can drown certain wetland plants if not rectified quickly.

D. Sediment and Soil Erosion Control Management: All sediment and soil erosion control devices, structures, and features, etc. are to be installed as required by the sediment and soil erosion control plan, and function properly at all times. Any deficiencies shall be corrected immediately. Twice monthly erosion control visits should be completed until the plantings have stabilized the site.

(1) The area of disturbance on-site at any one time shall be limited to 20 acres. An additional 20 acres (not to exceed a maximum of 40 acres at any one time) may be disturbed if necessary for earth balance.

(2) The City Engineer may approve a larger area for disturbance if (i) the developer adequately demonstrates the need for a larger area, (ii) the City Engineer finds that sufficient temporary and permanent erosion and sediment control measures can be maintained and (iii) and the area of disturbance is the smallest practical area at any one time and still minimizes the risk of sediment being introduced into site runoff and carried off-site.

(3) All disturbed areas shall be stabilized within fourteen days of final grading or when left idle for more than seven days, excluding maintained haul roads, sediment basins, site runoff storage facilities,

utility corridors less than 20 feet in width, and any permanently stabilized areas.

E. Prescribed Burn Management: The detention ponds and preserved wetlands shall undergo periodic burns after the second growing season or as fuel allows. These burns help to reduce undesirable weedy species and encourage native species. These burns should only be performed by a qualified burn contractor.

F. Invasive Non-native Weeds: Purple loosestrife, reed canary grass, common reed, willow, buckthorn, thistle and other invasive weeds shall be controlled by the following: Mechanically, through the use of mowing no sooner than the third week of July; fire (as fuels allow); application of herbicide; or a combination of these methods as deemed appropriate by the consultant.

G. Protection of Detention Ponds and Open Space Areas: Open space areas and constructed detention ponds shall have construction fencing placed around the limits of a no construction zone. No equipment or materials shall be stored within the no construction zone and no equipment shall be driven within it.

H. An annual report based on the above maintenance and management activities shall be submitted to the City by the spring of each year following the completion of the management tasks. The report will include a review of compliance with performance standards, and the proposed actions to reduce any shortfalls.

308 Signs

The developer shall furnish and erect all necessary signs, including street signs, as designated by the City Engineer, Police Department or City staff. All signs shall be of a type approved by the City Engineer, Police Department or City staff. The developer will submit a signage plan to be included with the final engineering plans which fully address the above. All signs shall comply with the standards set forth in Chapter 16 (entitled "Signs") of the City Code.

309 Easements

309.1 Easements. The following easements shall be provided where appropriate and identified on the Plat of Subdivision.

A. *Utility Easements*. Easements shall be provided for utility services including but not limited to gas, telephone, cable, and electric.

B. *Municipal Easements*. Easements shall be provided for municipal or public services including water, sewer, and storm sewer. A municipal utility easement for water or sewer shall not be placed in a side or rear yard.

C. *Drainage Easements*. When a subdivision is traversed by a waterway, intermittent stream or drainageway, there shall be provided a stormwater easement or drainage easement conforming substantially with the lines of same. Such easement shall be of

sufficient size to protect said waterway, intermittent stream or drainage way, and to permit ingress and egress for maintenance.

D. *Street Construction and Maintenance Easements.* Street construction and maintenance easements shall be provided adjacent to dedicated streets whenever additional width is necessary to meet the maximum earth slope requirements contained in the *Schedule of Minimum Design Requirements for Subdivision Streets in the City of Marengo (Section 608).* Street, construction and maintenance easements shall be separate and distinct from utility easements and the two shall not be combined. See Article 8 of this Ordinance for certification required on Final Plat to permit crossing of other easements.

E. *Greenway, Bikeway, and Pedestrian Path Easement.* Where a development includes or proposes to include a greenway, bikeway and/or pedestrian path easement, the developer shall, if the property is not dedicated to the City, or a public or quasi-public entity which accepts the same, provide an easement to allow the City and/or County to maintain the space in the event that it is not properly maintained and to charge the benefited properties.

F. *Landscape Berm Easement.* Where a development is required to provide reverse frontage lots with a landscape berm separating the residential lots from the street, the developer shall provide for the maintenance of the material.

309.2 Limitations on the Use of Easements.

A. No construction of structures, dams, embankments or channels (except as indicated on the Engineering Drawings), and no planting of trees, shrubbery or other flow-impeding vegetation, which hinders the flow of water or otherwise inhibits the intended purpose, shall be allowed within any drainage or stormwater retention or detention easements.

B. Municipal utility easements must be separate and distinct from public utility easements and the two shall not be combined.

C. A septic limitation line shall be shown in conjunction with each drainage and stormwater retention or detention easement demarcation line.

309.3 Maintenance of Easements.

A. Drainage and stormwater retention and detention easements shall be adequately maintained so as to provide for removal of accumulation of vegetation, silt, debris or other material which may interfere with the flow characteristics of drainage ways or the essential features of retention or detention facilities. The removal shall be undertaken at least annually.

B. Pedestrian way easements shall be maintained to permit their continued use.

C. Provisions shall be made through a homeowners association, deed restrictions, covenants or other acceptable means to maintain all easements in accordance with Sections 307.3.

310 ELECTRIC AND UTILITIES

310.1 Coordination. The developer shall keep all utility, i.e., gas, electric, cable and communication entities appraised of the progress on the subdivision, and coordinate construction activities with theirs. If underground utility installation cannot be completed prior to final grading and seeding, it shall be the responsibility of the developer to restore the ditches and turf following installation of underground utilities. Utility companies shall not dig trenches across any streets after placement of the aggregate base course unless complete restoration., meeting the approval of the City Engineer, is provided.

310.2 Lines Underground.

A. *New Development*. All electric, telephone, television and other communication lines, both main and service connections servicing new developments, shall be provided by underground wiring within easements or dedicated public rights-of-way and installed in accordance with the prevailing standards and practices of the utility or other companies providing such services. Conduits and/or cables shall be placed within the easements or dedicated public ways in a manner which will not conflict with other underground services. All transformer and above ground utility boxes shall be located so as not to be unsightly or hazardous to the public.

B. *Existing Streets and Service*. Lots that abut existing easements or public rights-of-away, where overhead electric or telephone distribution supply lines and service, connections have previously been installed, may be supplied with electric and telephone service from those overhead lines, but the service connections from the utilities' overhead lines shall be installed underground. In the case of existing overhead utilities, should a street widening, or an extension of service, or other such condition occur as a result of the subdivision and necessitate the replacement or relocation of such utilities, such replacement or relocation shall be underground.

310.3 Pole Placement. Whenever overhead lines are permitted, consistent with or as an exception to the above standards, the placement and alignment of poles shall be designed to lessen the visual impact of overhead lines. Alignments and pole locations shall be carefully routed to avoid locations along horizons; clearing swaths through wooded areas shall be avoided by selective cutting and a staggered alignment; trees shall be planted in open areas and at key locations to minimize the view of the poles and the alignments; and alignments shall follow rear lot lines and other alignments.

310.4 Street Lighting. Every development shall provide street lighting in accordance with the following standards:

A. Every street intersection shall have at least one streetlight placed in such a manner as to adequately light the intersection.

B. Streetlights shall be installed and operable before occupancy will be granted on any improved lots.

All street lighting shall be installed and maintained by ComEd using standard ComEd fixtures and poles. Where there is a choice of poles, fixtures and size of luminaire, the City shall make the final selection. Poles made of wood are not acceptable to the City. The City will consider the use of alternative decorative custom light fixtures, only when the homeowners association assumes responsibility for maintenance. Final subdivision plats, as approved by the Village Board, shall be sent to ComEd for approval of street lighting placement. The final street lighting plan shall also be reviewed by the City of Marengo to determine that adequate light levels are maintained and do not create excessive glare or light in residential areas.

C. All costs associated with the installation of the ComEd street lighting, equipment shall be paid by the developer.

D. All streetlights shall be on at dusk and off at dawn. Streetlights shall be controlled by a photo cell mounted on top of the luminaire.

E. The height and shielding of lighting standards shall provide proper lighting without hazard to drivers or nuisance to residents.

F. Streetlight standards shall be installed at least 10 feet from the edge of pavement for a rural section, or 30 inches behind, the back of curb for an urban section.

G. Lighting for safety shall be provided along walkways, between buildings and in parking areas that have or could be expected to have significant night traffic.

H. Spacing of streetlights shall comply with the standards set forth in sections 301.7 and 302.6 of this Ordinance.

I. Compliance with IDOT lighting standards for local roads.

310.5 Permits for Utility Services. Permits must be obtained from the governing body for the installation of communication, electric power, gas and other utility services, before any installation is started, and the City is to be informed in writing of above. Installation of all utilities must fully comply with all utility ordinances of the City.

311 IMPACT ASSESSMENT

311.1 Flood Hazard Area. If any portion of a lot falls within the boundaries of a Flood Hazard Area, as; identified by the Zoning Ordinance or other duly adopted maps or ordinances, or if a portion of a lot is traversed by an intermittent stream and/or waterway that portion of such lot shall be protected by a drainage easement and shall be excluded from the buildable area of that lot. When this situation results in the separation of the buildable area of a lot from the street to which it has access, provisions shall be made for the installation of an adequate drainage structure, and its construction shall be provided for as a condition of Plat approval.

311.2 Critical Soils. If any portion of a lot falls within the boundaries of critical soils as identified by the Soil Standards Manual for Waste Disposal Systems, that portion of such lot shall be designated as restricted for use of septic systems unless evidence can be produced to demonstrate that the soils can be managed by appropriate common engineering practices which would render the soils suitable. Soils removal and replacement and, the use of curtain drains, are not generally considered a suitable management practice. See the McHenry County "Groundwater Resources Management Plan" for additional standards.

311.3 Traffic Impacts. No subdivision plat shall be approved if its development will increase traffic to the extent that a lower level of service results, unless the proposal includes measures to mitigate such increased traffic. The maximum amount of traffic that will be permitted in the City shall be the Institute of Traffic Engineers' Level of Service C.

311.4 Snowplowing. The developer is responsible for plowing any street that the City has not accepted into the street system. The developer is responsible for any damage that may occur as a result of such plowing.

312 CONSTRUCTION SPECIFICATIONS

The following specifications shall govern, subdivision street construction in the City of Marengo and its 1.5 mile planning jurisdiction. Wherever reference is made to Standard Specifications, it shall mean the Standard Specifications for Road and Bridge Construction, adopted July 1, 1994 by the Illinois Department of Transportation (IDOT), as amended. Whenever reference is made to the IDOT Local Roads Manual, it shall mean Bureau of Local Roads and Streets Administrative Manual (latest edition). Wherever reference is made to Design Requirements, it shall mean the Schedule of Minimum Design Requirements for Subdivision Streets in the City of Marengo (Section 312 of this document).

312.1 Excavation and Grading. Streets within the subdivision shall be excavated true to line and grade in accordance with applicable articles of Section 202 of the Standard Specifications. Whenever unsuitable material is encountered in the sub-grade, it shall be removed and replaced with granular sub base material furnished and installed in accordance with the applicable articles of Section 311 of the Standard Specifications. The City Engineer or City staff shall inspect and approve the sub-grade prior to construction of the base course.

312.2 Base Courses. Base courses shall be constructed of a type, width and compacted thickness shown on the Design Requirements and in accordance with the following:

A. Bituminous Base Course shall be constructed in accordance with Section 355 of the Standard Specifications and the supplemental specifications referencing superpave mix design.

B. Aggregate Base Course Type B shall be constructed in accordance with Section 351 of the Standard Specifications, and the material used shall meet the requirements of Subsection 1004.04 of the Standard Specifications gradation CA-6 Crushed Gravel or stone.

312.3 Bituminous Surface Courses. Bituminous surfaces shall be constructed of a type, width and compacted thickness shown on the Design Requirements and in accordance with the following:

A. Bituminous Concrete Binder Course, Superpave and Bituminous Concrete Surface Course shall be constructed in accordance with Section 406 of the Standard Specifications and the Supplemental Specifications referencing Superpave Mix Design.

312.4 Bituminous Surface. Bituminous surface on an aggregate base shall not be constructed until the aggregate base has been completed and in place on the street for one winter season. This requirement may be waived by the City Engineer or City staff, and the bituminous binder course may be constructed under the following conditions:

A. The aggregate base is sufficiently compacted as demonstrated by methods required by the City Engineer or City staff.

B. The developer agrees to repair, to the satisfaction of the City Engineer, any areas of the binder course which show evidence of distress or failure prior to construction of the surface course. In any case, immediately prior to placing the binder and surface courses, the aggregate base course shall be prepared in accordance with Section 351 of the Standard Specifications.

   The City Engineer or City staff shall inspect and approve the base course prior to placement of the binder and surface courses. This may be accomplished by methods required by the City Engineer. Where "Conservation Sections" are utilized, the bituminous surface course shall be edged with tapered aggregate shoulders, 4 feet in width, and constructed in accordance with applicable articles of Section 481 of the Standard Specifications.

   The binder course or surface shall be applied only when the minimum temperature is 40 degrees and rising, and when frost is not present in the ground.

312.5 Concrete Pavement. Concrete pavement shall be constructed to a width and thickness shown on the Design Requirements and in accordance with applicable articles of Section 420 of the Standard Specifications.

312.6 Sidewalks. Concrete sidewalks 1 foot in from right-of-way shall be installed with a minimum aggregate base of 4 inches of Type B 100 percent crushed, with 4 inches of Portland cement concrete, with a minimum 6 bag mix. Sidewalk ramps shall be constructed of the type and at the location approved by the City Engineer and as required by the State. The developer may substitute, with the approval of the City Council, an off-site pedestrian trail as an alternative to a sidewalk on local streets. See Sections 303.16 and 303.17 of this document for sidewalk width requirements.

312.7 Curb and Gutter. Except where a proposed street would continue an existing street constructed with a conservation section, and the City determines that the continuation of that section is appropriate, all streets shall be improved with combination concrete curb and gutter as shown on the Design Requirements, and it shall be constructed in accordance with Section 606 of the Standard Specifications.

312.8 Drainage. Streets with a "rural section" will generally have an "open" drainage system, consisting of roadside ditches and culverts, while streets with a "urban section" will generally have a "closed" drainage system consisting of storm sewer and curb inlets. All ditches, culverts and storm sewers shall be sized and inlet spacing determined on the basis of calculations required in Article 8 of this Ordinance or as hereinafter specified. All drainage structures shall be in place before surfacing material is installed.

A. Open Drainage System. Cross-road culverts shall have a minimum diameter of 18 inches or equivalent, with metal end sections, and- shall run from ditch line to ditch, line. Driveway culverts shall have a minimum diameter of 15 inches or equivalent with metal end sections, and be of such, length so as to adequately span the driveway. Culverts shall meet the requirements of Appendix G of this Ordinance and shall be installed in accordance with Section 542 of the Standard Specifications.

B. Closed Drainage System. Storm sewers shall have a minimum diameter of 12 inches shall meet the: requirements of Appendix-G of this Ordinance land shall be installed in accordance with Section 550 of the Standard Specifications. Inlets, manholes and catch basins shall be constructed in accordance with Section 602 of the Standard Specifications. These drainage structures shall be of such diameter so as to adequately accommodate the number and configuration of pipes entering and leaving the structure. Frames and grates shall meet the requirements of Appendix G of this Ordinance.

312.9 Topsoil and Seeding. Prior to acceptance of any street, topsoil shall be placed on all unpaved areas within the right-of-way, in accordance with Article 211 of the Standard Specifications. Prior to acceptance of any street, any disturbed area within the right-of-way shall be smoothed by dragging, and planted with a seed mixture appropriate to the time of year in accordance with the recommendations of the USDA, Natural Resource Conservation District, for example hydroseeding or straw covering.

312.10 Trench Backfill. Whenever the excavation is within 2 feet of existing, proposed or future street, parking areas, driveways, or other paved areas, the trench shall be backfilled with approved selected granular material, compacted in place. The top 12 inches of the backfill shall be filled with road gravel or crushed stone and maintained as a temporary surface for the normal use of the area. Trench backfill shall consist of selected granular backfill Type CA-6 (100 percent crushed), and shall be compacted in place to 95 percent of maximum density at optimum moisture as, determined by the Standard Proctor Test.

Article 4

WATER AND WASTEWATER SYSTEMS

401 WATER SUPPLY

401.1 General. Any new development and any lot created pursuant to this Ordinance shall be served with a properly approved and functioning water supply system. Any new development or lot created pursuant to this Ordinance and lying within the City, shall be connected to the City water system at the development's expense. Depending on the number of residential dwelling units proposed, residential subdivisions outside the City, but within the City's 1.5 mile planning jurisdiction, shall be connected to an existing public water supply system at the development's expense if public water service is available within the following distances:

Table 3 – Public Water Supply

Size of Development	Distance
1 unit	200 feet
1-4 units	400 feet
5-15 units	800 feet
16-50 units	1,500 feet
More than 50 units	2,500 feet

Community water sources are prohibited within the 1.5 mile jurisdiction of the City. Whenever a development is not required to connect to the City water system, and does not propose to connect to the same, the developer shall provide service from individual wells in accordance with the McHenry County Department of Health regulations and consistent with the Comprehensive Plan. Any development that lies within the 1.5 mile planning jurisdiction, and which is not connected to the City water system, shall provide through restrictive covenants that property owners will connect to the system when City water is available to any portion of the tract as it was constituted prior to its subdivision at their expense. Any proposals to extend or connect to the existing public water system, or to use private wells, shall be approved by the appropriate governmental entities.

401.2 Capacity. The water supply system shall be adequate to handle the necessary flow based on the completed development. The demand rates for all uses shall be considered in computing the total system demand. Where fire protection is provided, the system shall be capable of providing the required fire demand plus the required domestic demand. The average daily residential and nonresidential demand shall be computed in accordance with Title 35 of the Illinois Administrative Code. Fire protection shall be furnished at the developer's expense for any development connected to the municipal water supply system.

401.3 System Design.

A. *General.* Except as provided below, system design and placement shall comply with the construction specifications set forth in the Standard Specifications for Water and Sewer Main Construction in Illinois, May 1996 (or latest addition), as amended, by Illinois Society of Professional Engineers (ISPE), Illinois Municipal League and AGC of Illinois, referred to in this Article as the Standard Specifications for Water and Sewer. All testing and disinfection shall be in accordance with current American Water Works Association (AWWA) standards or such other standards as may be imposed by the Illinois Environmental Protection Agency (IEPA) or ISPE.

B. *Specific.* The water distribution system shall be designed to provide water meeting or exceeding the standards set out in Title 35 of the Illinois Administrative Code. Water mains shall have a minimum diameter of 8 inches. Water mains shall whenever practical be located between the sidewalk and the curb on the north or west side of the street with the top of pipe at least 6 feet from the finished grade. Watermains shall be extended the entire length of each street and connected to the existing water distribution or terminated with a line valve and hydrant. Dead end watermains within a development shall be looped as directed by the City Engineer. Valves (open left) shall be located no further apart than 800 feet in residential areas and 600 feet in other areas. Two valves shall be provided at every "T" intersection of water main. Three valves shall be provided at every "X" intersection of a watermain. Valves shall be placed so that the closure of a maximum of three valves is necessary to shut down any point in the system. Air release valves shall be provided at high points. Valve vaults, of a type specified in the Standard Specifications for Water and Sewer, shall be provided for all valves except fire hydrant auxiliary valves. The word "Water" shall be permanently imprinted on the face of the valve box, and valve vault covers. Notwithstanding anything to the contrary, the size, type and installation of any water main materials shall meet the specifications set out in the City of Marengo Water Main and Sanitary Sewer Materials List, in Appendix G.

C. *Water Services.* Water services shall use the size and materials set out in Appendix G., In the event the City approves service using a larger size than. provided therein, the connection: shall be made by use of proper fittings to protect the main. Services greater than 2.5 inches shall be of ductile iron and shall be tapped under pressure, with a tapping sleeve and vault. Multiple taps and the use of a branch gooseneck or "tree connections": are not allowed. Customer water service lines shall be stubbed from the water main to the nearest private property lot line. Water services shall have at least 5 feet 5 inches, but no more than 6 feet, of cover. Every building on a lot served with water shall have. its own separate water service with curb stop/curb box, and taps should be directly into the respective mains.

D. *Tapping Requirements.* New mains shall be directly tapped into the water main by way of pressurized tap using all cast iron fittings with the valve being located inside a manhole encompassing the entire valve, tap connections and main. The main will be tested by the developer and witnessed by either the Fire Department Inspector, Building Commissioner, or Superintendent of Water/Sewer Department.

E. *Permits.* No water system construction may begin without a valid public water supply construction permit issued by the IEPA. No water system improvement may be operated without a valid operating permit issued by the IEPA.

401.4 Fire Hydrants. Hydrants shall be spaced to provide necessary fire flow. Hydrants shall be placed not more than 300 feet apart. Hydrants shall be located at the ends of line. Valves of full line size and a 10 foot section of pipe with a plug shall be provided after hydrants at the end of all dead end lines that may be extended in the future. Fire hydrants shall have a 6 foot bury with final landscaping grade being not more than 2 inches higher or lower of the bury line on each hydrant and the minimum distance from the landscaping grade to the center of the: steamer nozzle being 18 inches and 24 inches maximum. Notwithstanding anything to the- contrary, the size, type and installation of any hydrant shall meet the specifications set out in the City of Marengo Water Main and Sanitary Sewer Materials list in Appendix G.

402 SANITARY SEWERS

402.1 General. Any new development and any lot treated pursuant to this Ordinance shall be served with a properly approved and functioning wastewater disposal system. Any new, development or lot created pursuant to this Ordinance and lying within the City shall be connected to the City sanitary sewer system at the development's expense. Depending on the number of residential dwelling units proposed, residential subdivisions outside the City but within the City's 1.5 mile planning jurisdiction shall be connected to the City sanitary sewer system at the development's expense if sanitary sewer service is available within the following distances:

Table 4 – Sanitary Sewer Service

Size of Development	Distance
1 unit	200 feet
1-4 units	400 feet
5-15 units	800 feet
16-50 units	1,500 feet
More than 50 units	2,500 feet

In determining whether City sanitary sewer service is available, the City will consider the costs of upgrading existing mains and constructing or replacing lift stations, and the extent to which any excessive costs can be recaptured within a reasonable period of time. Whenever a development is not required to connect to the City sanitary sewer system, but proposes to comply with this Ordinance by service from a community sewer source, the system shall be designed consistent with this Article. Whenever a development is not required to connect to the City sewer system, and does not propose to connect to the same or provide service through a community sewer system, the developer shall provide an individual subsurface disposal system in accordance with the McHenry County Department of Health regulations. All proposals for new public sanitary, sewer systems, or extensions to existing public sewer systems, or the use of community sanitary sewer system or individual subsurface disposal systems, shall be approved by the appropriate government entities.

402.2 Sanitary Design and Placement.

A. General. The sanitary sewer system shall be adequate to handle the necessary flow based on complete development in accord with the standards set out in Title 35 of the Illinois Administrative Code. System design and placement shall comply with the specification set forth in the Standard Specifications for Water and Sewer. The sewers shall be designed in such a way as to insure a minimum velocity of flow of 2 feet per second and a maximum velocity of flow of 8 feet per second. Future extension of sanitary sewers to serve adjacent property must be addressed. This includes sewer depths and sizes.

B. Sanitary Sewer Materials. Notwithstanding anything to the contrary, sanitary sewer materials shall meet the standards set out in the City of Marengo Water Main and Sanitary Sewer Materials list (See Appendix G).

C. Sanitary Sewer Alignment. The sanitary sewer manhole frames are to be located in the center of the street or be located as close to the property lines as practical.

D. Manholes. Manholes shall be provided at all changes in direction or pipe size and be not more than 400 feet apart. Manholes shall be as specified in Appendix G. Drop manholes shall be required where the elevation of the invert pipe is hydraulically required to be a minimum of 2 feet above the invert of the manhole. In all other cases, the influent pipe invert shall be no more than 6 inches above the manhole invert. The manhole cover shall have the word "Sanitary" permanently imprinted on the face of the cover.

E. Lift Stations. Whenever a development proposes to use a lift station to serve part or all of the lots in the development, the lift station shall be designed to the satisfaction of the City and offered to it for dedication. The City may refuse to accept the dedication where it finds that the development will probably be served without the use of the lift station at some time during the planning period. Any lift station shall be housed in a building which is compatible in, design with the nearby uses and which is large enough to accommodate any required equipment. Each lift station shall, include a flow meter approved by the City Engineer. Every lift station shall include an emergency backup power supply using diesel or natural gas, and an extra pump. Each station shall be connected to the City: in such a manner that the City is electronically notified if the pumps are not functioning.

F. Service Lines. Sanitary sewer services shall be a minimum diameter of 6 inches and constructed with material as specified in Appendix F. The minimum slope for any diameter service line shall meet or exceed the *State of Illinois Plumbing Code*. Services constructed as part of a new main sewer extension shall be connected to the main sewer using a wye. Eight inch diameter services or larger may be connected at a manhole when approved by the Superintendent of Water/Sewer. Department clean outs shall be required for all sanitary services: located just outside of the building foundation and at all bends greater than 22.5 degrees and brought to the final grade of each location.

403 Oversizing Water and Sewer Facilities

The City may require the developer to size water and sanitary sewer facilities to address future development consistent with the Comprehensive Plan. Where appropriate, the City may enter into an agreement with the developer to provide reimbursement from future developments for any required increase in size.

Article 5

STORMWATER MANAGEMENT

501 PURPOSE

Stormwater Management requirements are set forth in the McHenry County Stormwater Ordinance as amended by the City under Chapter 29 of the Marengo Municipal Code.

Article 6

LAND DEVELOPMENT ORDINANCE

601 DEDICATION OF SCHOOL SITES, PARK, MUNICIPAL, FIRE PROTECTION, RESCUE SQUAD AND LIBRARY LANDS OR CASH CONTRIBUTIONS IN LIEU THEREOF

601.1 Legislative Intent: As a condition of approval of a final plat of subdivision or of a final plat of a planned development, each subdivider or developer shall be required to dedicate land for library, park, recreational, fire/rescue and school purposes to serve the immediate and future needs of the residents of the development, or shall be required to make a cash contribution in lieu of actual land dedication, or a combination of both, at the option of the City with the concurrence of (or at the request of) the affected district or districts, which concurrence shall be obtained in writing. However, the City shall have the final decision making power in this regard. Dedication of land may be made to the City or to the applicable district at the discretion of the City Council. The dedications and cash contributions required hereunder shall be made in accordance with the criteria and formulae herein.

602 CRITERIA FOR THE DEDICATION OF SCHOOL, PARK, AND PUBLIC LANDS

602.1 Criteria for Requiring School Site Dedications:

A. *Requirement and Population Ratio:* The ultimate number of students to be generated by a subdivision or planned development shall bear directly on the amount of land required to be dedicated for school sites. The land dedication requirement shall be determined by obtaining the ratio of (a) estimated number of children to be served in each school classification (as described in Paragraph B, below) from the subdivision or planned development over the (b) maximum recommended number of students to be served in each such school classification as stated herein, and then applying such ratio to (c) the appropriate number of acres for a school site of each such school classification as stated herein. The product thereof shall be the acres of land deemed needed to have sufficient land for school sites to serve the estimated increase in number of students for each such school classification.

B. *School Classifications and Size of School Site*: These requirements for acreage are based upon a review of available data studies and literature on the subject, including but not limited to, information provided by the State Board of Education and the unique characteristics of the City, including its general rural character and open spaces, and the desire of the residents to maintain this character and open space in future school sites. These requirements for acreage shall be presumed as the appropriate acreage requirements and shall be used in calculating any cash in lieu of land dedication herein unless timely objected to as provided herein. Objections to these acreage requirements for any particular development shall be made in accordance with Section 609 herein to the Planning and Zoning Commission. Failure to timely object to these acreage requirements in accordance with Section 609 herein shall thereafter waive any right to raise an objection at a

later time.

C. School classifications and size of school sites within the City shall be determined in accordance with the following criteria:

Table 5 – School Size and Classification

SCHOOL DISTRICTS #154, 165 and 18		
School Classification by Grades	**Maximum Number of Students for Each Such School Classification**	**Appropriate Number of Acres of Land for Each School Site of Such Classification**
Elementary Schools, Grades kindergarten through 5th or 6th	500 students	16 acres
Junior high schools, grades 6th through 8th or 7th and 8th	600 students	25 acres
High schools, grades 9th through 12th	1,500 students	75 acres

D. *Location:* The Comprehensive School Plan and/or the standards adopted by the affected School District shall be used as a guideline in locating sites. School sites shall be located in accordance with plans heretofore or hereafter adopted by the school district.

602.2 Criteria for Requiring Park and Recreational Land Dedications:

A. *Suitability:* The land for park and recreational dedications shall be suitable for the purpose for which it is intended. Land set aside by developers for parks and recreation purposes shall not be merely what has been "left over" after residential, commercial and industrial development.

B. Requirement and Population Ratio: The ultimate density of a proposed development shall bear directly on the amount of land required for dedication for park and recreational purposes. The total requirement shall be 10.5 acres of land per 1,000 of ultimate population and may be allocated by the City Council at its discretion based upon the following criteria:

Table 6 – Requirement and Population Ratio Criteria for Park

Type of Recreation Area	Minimum Size	Park Acreage per 1,000 Persons
Play Lot	8,000 square feet	< 1
Neighborhood Park	3 acres	2 acres
City-Wide Park for Active Sports	10 acres	4 acres
City-Wide Community Park	15 acres	4 acres

These requirements for acreage are based upon a review of available data studies and literature on the subject, including but not limited to, the National Recreation and Park Association's *Recreation, Park and Open Space Standards and Guidelines, 1990* and the District's own internal examination of service needs and utilization. These requirements shall be presumed as the appropriate acreage requirements and shall be used in calculating any cash in lieu of land dedication herein unless timely objected to as provided herein. Objections to these acreage requirements for any particular development shall be made in accordance with Section 609 herein to the Planning and Zoning Commission. Failure to timely object to these acreage requirements in accordance with Section 609 herein shall thereafter waive any right to raise an objection at a later time.

C. *Location:* The Marengo Park District Comprehensive Plan or the park and recreation plans as adopted by the City's Comprehensive Plan shall be used as a guideline in locating sites. A central location that will serve equally the entire development or a location that is adjacent to existing park and recreational land is most desirable. In large developments, these sites can be located throughout the development according to established standards for park area distances.

602.3 Fire and Rescue Capital Facilities Contributions and Site Dedications:

A. *Requirement and Population Ratio*: The development of new subdivisions and planned developments increases the demands upon the existing fire and rescue protection service provided to the City in a proportionate and ascertainable manner and creates the need for additional fire and rescue facilities and training sites. Studies reveal the need to develop additional fire and rescue protection services. Therefore, as a condition of approval of a final plat of subdivision or of a final plat of a planned development, each developer or subdivider shall be required to dedicate land for fire and rescue facilities to serve the immediate and future needs of the residents of the development or shall be required to make a cash contribution in lieu of actual land dedications.

The ultimate density of a proposed development shall bear directly on the amount of land required for fire and rescue site dedications. The City hereby finds that the total requirement shall be as follows:

Table 7 – Requirement and Population Ratio Criteria for Fire

Marengo Fire Protection District:	2 acres of land per 10,000 of ultimate population.
Marengo Rescue District:	2 acres of land per 10,000 of ultimate population.

This contribution and/or dedication is based upon a review of available data, studies and literature, including, but not limited to, the requirements of surrounding communities and the respective fire and rescue districts' own internal examination of service utilization and needs. They shall be presumed to be correct and accurate and shall be used in calculating cash contributions herein unless timely objected to as provided herein. Objections to this Section 602.3 shall be made in accordance with Section 609 herein. Failure to timely object to these requirements in strict accordance with Section 609 herein shall thereafter waive any right to raise an objection at a later time.

The Fire and Rescue Capital Facilities Contributions shall be held in trust by the City or other public body designated by the City and shall be used for the purpose of assisting in providing additional facilities for municipal purposes. The City may contract with other units of local government for the provision of fire/rescue services. Funds obtained pursuant to this Section may be transferred to those entities for the purpose of assisting in the provision of additional facilities which will benefit the City.

B. *Location:* The location of any new fire or rescue facility and/or training sites shall be determined by the appropriate district in consultation with the City.

602.4 Criteria for Requiring Library Site Dedications:

A. *Requirement and Population Ratio:* The ultimate density of a proposed development shall bear directly on the amount of land required for dedication. New development and increased population create greater demands for adequate and efficient library services to meet the educational, cultural and recreational needs of the citizenry. They create the need for additional library facilities. The City hereby finds that the total requirement shall be 2.5 acres of land per 10,000 of ultimate population.

These requirements are based upon a review of available data, studies and literature on the subject, including but not limited to *Building for the Future: an assessment of library service goals, space needs and use strategies for the Marengo Public Library District* prepared by Library Planning Associates, Inc. and dates May 21, 2002 as well as the Library District's own internal examination of library utilization and needs. They shall be presumed as the appropriate acreage requirements and shall be used in calculating any cash in lieu of land contribution herein unless timely objected to as provided herein. Objections to these acreage requirements for any particular development shall be made in accordance with Section 609 herein. Failure to timely object to these acreage requirements in accordance with Section 609 herein shall thereafter waive any right to raise an objection at a later time.

B. *Location:* The location of any new library facility shall be determined by the Library in consultation with the City.

603. Criteria for Requiring a Cash Contribution in Lieu of Dedication of School, Park, Library, Fire and Rescue Sites.

603.1 Criteria. When the development is small and the resulting site is too small to be practical, or when the available land is inappropriate for park and recreational purposes, school, fire, rescue or library sites, or is in conflict with the approved standards or plans of the affected district, the City, with the concurrence of the affected District, shall require the subdivider or developer to pay a cash contribution in lieu of the land dedication.

A. The cash contribution in lieu of school land dedication, and any and all interest earned thereon, shall be held by the benefiting school district or other public body designated by the benefiting school district and shall be used for the acquisition of land as classified above and its improvement for school sites to serve the immediate or future needs of children from that subdivision or development or for the improvement to any existing school site that already serves such needs, or for the construction of school buildings or additions thereto in accordance with Public Act 93-0330 or for any purpose defined by agreement with the subdivider or developer in accordance with Section 603 and Exhibit B-3 of Appendix B of this ordinance.

B. The cash contribution in lieu of park and recreation land dedication shall be held by the benefiting Park District or other public body designated by the benefiting Park District and shall be used for the acquisition of park and recreation land as classified above and its improvement, which will be available to serve the immediate or future needs of the residents of that subdivision or development or for the expansion of other existing local park and recreation lands that already serve such needs or for any other lawful park purpose or for any park purpose agreed to by the subdivider or developer at the time of platting.

C. The cash contribution in lieu of a library site dedication shall be held by the benefiting Library District or other public body as designated by the City and shall be used for the acquisition of library land as required herein and its improvement, which will be available to serve the immediate or future needs of the residents of that subdivision or development or for the expansion of existing or proposed library facilities that already serve or will serve such needs or for any other lawful purpose provided by law or agreed to by the subdivider or developer at the time of platting.

D. The cash contribution in lieu of fire sites shall be held by the benefiting Fire Protection District or other public body as designated by the City and shall be used for the acquisition of land and its improvement for fire protection facilities or training sites to serve the immediate and future needs of the residents of that subdivision or development or for the expansion of any other existing fire station or training site that already serves such needs or for any other lawful fire purpose provided by law or agreed to by the subdivider or developer at the time of platting.

E. The cash contribution in lieu of rescue sites shall be held by the benefiting Rescue District or other public body as designated by the City and shall be used for the acquisition of land and its improvement for rescue service facilities or training sites to serve the immediate and future needs of the residents of that subdivision or development or for the expansion of any other existing rescue facility that already serves such needs or for any other lawful rescue purpose provided by law or agreed to by the subdivider or developer at the time of platting.

603.2 Refunds. If any portion of a cash contribution is not expended for the purposes stated above within 13 years from the date of Final Plat approval (if paid at plat approval) or from the date of building permit (if paid at building permit), it shall be refunded without interest to the present owner of the property for which the contribution was made. Refunds shall only be provided when the payee presents a written request addressed to the affected government body holding the money within the 14th year following such payment. If such request is not made during the fourteenth year, at the commencement of the fifteenth year the affected government body holding the money shall be authorized to declare such funds abandoned and use the money for any legitimate purpose.

603.3 Fair Market Value: The cash contributions in lieu of land shall be based on the fair market value of the acres of land in the area that otherwise would have been dedicated as park and recreation, library, fire, rescue and school sites. In calculating the fair market value, on a per acre basis, unless determined otherwise pursuant to Section 609 herein, the following assumptions about the land shall be made: (a) that it is zoned in a one-family dwelling residential zoning district; (b) that it is subdivided with appropriate frontage on a dedicated street or road, stubbed with municipal sewer and water and has all appropriate utilities available; (c) that it is improved as set forth in Section 608 herein, and (d) that it is otherwise property capable of being used for residential development. Based upon a study of comparable real estate transactions, it has been determined that the present "fair market value" of such improved land in and surrounding the City is, as of the effective date of this Ordinance "04-9-2," as follows:

A. $80,000.00 per acre for purposes of locating an elementary or junior high school within School Districts 165 and 18 and locating a high school within School District 154.

B. $60,000.00 per acre for purposes of locating a park[1].

C. $300,000.00 per acre for purposes of locating a fire or rescue station[2]

D. $300,000.00 per acre for purposes of locating a new library facility and/or adding

[1] Land suitable for park and recreational purposes may have a lesser value depending upon location, buildability, and whether the site is used as an active or passive park site. This fair market value reflects these considerations.

[2] Fire and Rescue stations must be strategically located to maximize response time and have access to major arterial roads. This fair market value reflects these considerations.

on to the existing Library[3]

These figures shall be adjusted by the City Council from time to time, but no less frequently than once every three years, with appropriate study and documentation. The fair market value as defined above shall be used in calculating any cash contribution in lieu of land dedication required herein unless timely objected to as provided in Section 609 herein. Objections to the fair market value as defined above shall be made in accordance with Section 609 to the Planning and Zoning Commission. Failure to timely object to the fair market value as defined above in accordance with Section 609 herein shall thereafter waive any right to raise an objection at a later time.

603.4 Criteria for Requiring Dedication and a Contribution: There will be situations in subdivisions or planned developments when a combination of land dedication and a cash contribution in lieu of land are both necessary. These occasions will arise when (a) only a portion of the land to be developed is proposed as the location for a library, park, municipal, fire, rescue or school site (that portion of the land within the subdivision falling within the library, park, municipal, fire, rescue or school location shall be dedicated as a site as stated above, and a cash contribution in lieu thereof shall be required for any additional land that would have been required to be dedicated); or (b) a major part of the local library, park, municipal, fire, rescue or school site has already been acquired by the particular district or City and only a small portion of land is needed from the developer to complete the site (the remaining portion shall be required as a cash contribution in lieu thereof).

604. Consumer Price Index.

The fair market values identified in Section 609.A above shall be subject to a "CPI Adjustment" which shall be calculated on January 1, 2005 and on the first day of January in each year thereafter. Annually, the fixed charge shall be adjusted to an amount equal to the fixed charge multiplied by a fraction, the numerator of which is the "All Items" Consumer Price Index for Urban Consumers (1982-84 = 100) for Chicago, Illinois, published by the United States Department of Labor's Bureau of Labor Statistics ("CPI") for the month of December preceding the year of adjustment and the denominator of which is the CPI for the month of December preceding the month of adjustment. If any index is calculated from a base different from the base period 1982-84 = 100, such index shall be converted to a base period of 1982-84 = 100 by use of a conversion factor supplied by said Bureau of Labor Statistics. If the CPI is discontinued or replaced, such other governmental Cost of Living Index or computation which replaces the CPI shall be used in order to obtain substantially the same result as would be obtained if the CPI had not been discontinued or replaced.

605. Density Formula.

The *Table of Estimated Ultimate Population Per Dwelling Unit* (the "Density Formula") , prepared by Illinois School Consulting Service/Associated Municipal Consultants, Inc., Naperville, Illinois, in 1996 and as updated from time to time by the consulting firm, contained in Appendix B herein, constitutes projections of anticipated population density and is generally indicative of current and

[3] An addition to the existing library would entail purchase of property adjoining the existing library. A new library must be strategically located to accommodate the maximum number of patrons, and in the tradition of the existing library, be accessible and visible.

short-range projected trends in family size for new construction and shall be used in calculating the amount of required dedication of acres of land or the cash contributions in lieu thereof unless a written objection is filed thereto by the subdivider or developer pursuant to Section 609 herein. The City recognizes that the Density Formula may be updated from time to time and will, as a result, adopt these updates periodically by amending this Ordinance accordingly.

605.1 Bedroom Definition. A bedroom as used in this Section 605, shall include any room which may be used for bedroom purposes, such as a den, study, loft or extra room located on any floor in a dwelling unit which may be convertible into a sleeping area and is not clearly identified for some other specific purpose such as a kitchen (one per unit), dining room (one per unit), living room (one per unit), bathroom(s) and family room (one per unit).

605.2 Objections. The Density Formula, as updated, shall be used in calculating any cash in lieu of land dedication herein unless objected to as provided in Section 609 herein. Objections to the Density Formula shall be made in accordance with Section 609 to the Planning and Zoning Commission. Failure to object to the Density Formula in accordance with Section 609 shall thereafter waive any right to raise an objection at a later time.

A. In the event a subdivider or developer files a written objection to the Density Formula listed above, he shall submit his own demographic study showing the estimated additional population to be generated from the subdivision or planned development, and in that event final determination of the density formula shall be made in accordance with Section 609 herein.

606. Reservation of Additional Land:

When the Comprehensive Plan or the standards of the City call for a larger amount of park and recreational land, library, school or fire and rescue sites in a particular subdivision or planned development than the developer is required to dedicate pursuant to this Article 6, the land needed beyond the developer's dedication shall be set aside and reserved by the developer for subsequent purchase (at a price determined at the time of reservation) by the City or other public body designated by the City, provided that such acquisition is made within one year from the date of approval of the final plat.

607. Combining with Adjoining Developments:

Combining with Adjoining Developments: Where appropriate, a public open space or a school site that is to be dedicated should, if possible, be combined with dedications from adjoining developments in order to produce usable recreation areas and/or school sites without undue hardship on a particular developer.

608. Site Requirements:

608.1 Topography and Grading. The slope, topography and geology of the dedicated site as well as its surroundings must be suitable for its intended purpose. Wetlands and flood plains may be accepted for City ownership and maintenance, but shall not serve as a credit toward any required site dedication. Storm water detention areas shall not be accepted for City ownership and maintenance, and the portion of a detention area designed to function primarily as a component of the Storm water control system shall not serve as a credit toward any required site dedication. A park site shall be not less than one acre in area. The

City Board reserves the right, however, in its sole discretion, to accept in whole or in part, certain areas such as, but not limited to, tree massings, prairie remnants, high quality or unique wetlands, or other natural features as all or part of the required park site dedication in furtherance of open space preservation that may be unique to a given parcel or development. Wetlands, flood plains, detention areas, retention areas and areas of steep slope shall not be accepted as school, park, fire, rescue or library sites and shall not serve as a credit toward the required school, park, fire, rescue or library site cash contribution in lieu of land dedication.

In addition, the following site conditions and preparation standards shall be met:

A. *Slope:*

(1) Should not vary greatly in appearance from existing and adjacent slopes;

(2) Optimum slopes range from two percent minimum to five percent maximum. No less than two percent slope is acceptable under any circumstances;

(3) Maximum allowable slope is 10 percent, except under special conditions where greater slopes are desirable to enhance the use of the site; and

(4) On-site drainage patterns shall be designated and constructed to:

a. Ensure flow toward swales; and

b. Ensure drainage away from active areas.

B. Grading:

(1) Rough grading shall be completed at time of rough grading of adjacent contiguous area;

(2) Grading shall comply with City approved plans;

(3) Sub-grade shall be graded and compacted so it will parallel finished grade;

(4) Sub-grade material shall be loosened and fine graded to a depth of two to four inches. All stones over four inches in size, sticks, debris, rubbish and other foreign substances shall be removed; and

(5) Finished grades shall be uniform in slope between points for which elevations have been established.

C. Soils:

(1) Soils shall not differ from those naturally occurring;

(2) Soils shall not offer any restriction to the ultimate use of the property;

(3) Topsoil shall be spread evenly and lightly compacted to a minimum depth of six inches over the entire site;

(4) Topsoil must be good, friable soils with good tillage and shall be without any admixture of subsoil, clay, gravel, stones, debris, refuse, sand or other subsurface elements;

(5) Topsoil shall not be placed in a muddy or frozen condition;

(6) Topsoil shall contain no toxic substances which may be harmful to plant growth; and

(7) Topsoil shall be spread no later than the placement of topsoil on the first lot adjacent to the site.

D. *Seeding:*

(1) All proposed library, park and recreational and school sites shall be seeded and an acceptable stand of grass or vegetation established prior to dedication of the area to the City;

(2) City-approved ground covers and grasses shall be used for all park and recreational areas suitable for the nature of the activity planned to occur thereon;

(3) Seeding shall be completed during the fall or spring planting times, depending upon the recommended seed planting specifications;

(4) Seeding shall be on moderately dry soil on a seed bed which will easily accept and nurture germination of seeds;

(5) Seeding shall be watered sufficiently so that the vegetation becomes reasonably established; and

(6) The developer shall be responsible for making necessary reparations to the site caused by erosion or other damage. Reparations shall be completed prior to acceptance of the site.

608.2 Improved Sites

All sites shall be dedicated in a condition ready for full service of electricity, natural gas, telephone and cable television, water, sewer and streets (including enclosed drainage and curb and gutter, where applicable), as applicable to the location of the site, and shall otherwise comply with the requirements of the City ordinances and codes. The landscaping normally included within the definition of "improved" sites under said ordinances and codes may be deleted due to the delay time between dedication of any such school site and the construction of school facilities thereon, except for groundcover as required in Section 608.1 D4 herein. The site shall have direct access to a fully improved street across at least 20 percent of the distance of its perimeter. School, park and library sites should ideally be accessible by a bicycle/pedestrian trail, and any such access route onto the property shall be at least 30 feet wide. Such access routes should normally be dedications and not easements, depending on which entity of government is to be responsible for said routes. Any vehicular access route leading to or on the site shall be of sufficient size and good geometry to

properly accommodate vehicles that will access and traverse the site, including but not limited to good principles of traffic circulation, accommodation of one-way and/or two-way drives for school buses, separation of bus traffic from passenger automobile traffic, bus drop-off areas separate from publicly-dedicated streets, guest and employee parking areas, and the like. Such off-street access routes, drives, drop-offs and parking areas will not be dedicated rights-of-way and shall be the responsibility of the owner of the site to maintain.

608.3 Environmental Risk Audit

Prior to the conveyance of any land to the City, library district, park district, fire protection district or school district, the intended grantee shall be furnished with an environmental risk audit prepared by an environmental professional meeting the minimum requirements of 415 ILCS 5/22.2(j)(6)(E)(iii), certified to and acceptable to the grantee, assuring the grantee that there are no hazardous substance(s) (as defined hereinafter) on, under, to or from the land. Said environmental audit shall be what is commonly referred to as a Phase I Environmental Audit, which shall meet the minimum requirements for a pre-acquisition audit as set for in 415 ILCS 5/22.2(j)(6)(E)(iii)(v).

In the event the Phase I Environmental Audit does not conclude there is no presence or likely presence of a release or substantial threat of a release of hazardous substance(s) or pesticide on, under, to or from the land, the grantee shall furnish a Phase II Environmental Audit as set forth in 415 ILCS 5/22.2(j)(6)(E)(iii)(vi), including a soil toxicity analysis and recommendation from said environmental professional, meeting the minimum requirements of 415 ILCS 5/22.2(j)(6)(E)(iii), which concludes that there is no presence or likely presence of a release or substantial threat of a release of hazardous substance(s) on, under, to or from the land, and certifying that, in the judgment of said environmental professional, there is no reasonable probability that the land contains any hazardous substance(s) in violation of any federal or state environmental standards.

In the event said Phase II Environmental Audit and/or soil toxicity analysis discloses the presence or likely presence of a release or a substantial threat of a release of any hazardous substance(s) at, on, under, to or from the land to the conveyed, the grantor shall first cause all such hazardous substance(s) to be removed at its sole cost and expense in accordance with all federal, state and local environmental laws, rules and regulations and furnish the intended grantee with a "No Further Remediation Letter" from the governmental agencies having jurisdiction over the clean up prior to conveyance of any of the land to the intended grantee.

Prior to the conveyance of the land, the subdivider or developer, as the case may be, and the owner of the land to be conveyed, shall execute and deliver to the intended grantee an Environmental Indemnification Agreement, which form has been approved by the City Attorney, agreeing to defend, indemnify and hold the City, its corporate authorities, officers, officials, employees, agents, successors and assigns, and the appropriate benefiting governments, as the case may be, and its respective officers, officials, employees, agents, successors and assigns, harmless from and against any and all liability, claims, damages, causes of action and expenses arising out of the presence of any hazardous substance(s) in, under or upon said land to be conveyed prior to the date of conveyance.

Hazardous substance(s) includes without limitation:

A. Those substances included in the definitions of hazardous substances, extremely hazardous substances, hazardous materials, toxic substances, toxic chemicals, toxic

wastes, hazardous chemicals, hazardous wastes, solid waste and pesticides in CERLA, SARA, RCRA, HSWA, TSCA, OSHA, FWPCE, Illinois Pesticides Act (415 ILCS 60/1 et seq.), Illinois Responsible Property Transfer Act (765 ILCS 90/1 et seq.) and the Illinois Hazardous Materials Transportation Act (430 ILCS 30/1 et seq.), 49 U.S.C. Section 1801 et seq., as amended, and as they may be amended in the future, and in the regulations promulgated pursuant to said laws.

B. Those substances defined in Section 603 of the Illinois Environmental Protection Act and in the regulations promulgated pursuant to said act or other Illinois laws pertaining thereto.

C. Those substances listed in the U.S. Department of Transportation Table (49 CFR 172.101 and amendments thereto) or by the Environmental Protection Agency (or any successor agency) as hazardous substances (40 CFR Part 302 and amendments thereto).

D. Such other substances, materials and wastes which are to become regulated under applicable local, state or federal law, or which are classified as hazardous or toxic under federal, state or local laws, ordinances or regulations.

E. Any material waste or substance which is (a) asbestos, (b) polychlorinated biphenols, (c) designated as a hazardous substance pursuant to Section 311 of the Clean Water Act, 33 U.S.C. Section 1251 et seq. (33 U.S.C. Sec. 1321) or listed pursuant to Section 307 of the Clean Water Act (33 U.S.C. Sec. 1317, (d) explosives, or (e) radioactive materials.

F. For purposes of this Article 6, hazardous substances shall include petroleum or its byproducts as regulated under RCRA and any applicable state law or regulations.

608.4 Suitability of Solis at Site

The subdivider or developer, at its own cost or expense, shall provide to the City, library district, park district, fire protection district, rescue district or school district soil boring data, soil compaction test results and such other engineering studies, data and information pertaining to the proposed school, library, fire, rescue or park and recreational site, which the City, library district, park district, fire protection district, rescue district or school district may request to enable it to determine the suitability of the proposed land dedication for library, fire/rescue or school sites or park and recreation purposes. The City, library district, park district, fire protection district, rescue district or school district shall have the right to reject any site which the City, library district, park district, fire protection district, rescue district or school district determines, in accordance with sound engineering practices, is not suitable for library site, fire, rescue site, park and recreational site or school site purposes.

608.5 Title Insurance, Survey, Assessment Plats

Title Insurance, Survey, Assessment Plats: Each deed or other instrument conveying land to the City, library district, park district, fire protection district, rescue district or school district shall be accompanied by:

A. A written commitment issued by a title insurer licensed to do business in the state to insure the grantee's title to such real estate in an amount equal to the value computed pursuant to Section 603 herein, with extended coverage over the general exceptions to title and subject only to:

(1) real estate taxes not yet due and payable,

(2) covenants, conditions and restrictions which do not prohibit the use of the subject property for its intended library, school, fire and rescue or park and recreational use,

(3) utility easements located within 20 feet of the boundary lines of the subject real estate (except where approved on the final engineering plans approved by the City Engineer),

(4) drainage ditches, feeders and laterals.

(5) underground pipe or other conduit, and

(6) acts done or suffered by or judgments against the grantees.

B. A current ALTA boundary line survey, certified to the grantee by a licensed Illinois Land Surveyor to be in compliance with the American Land Survey Standards, showing no encroachments; and

C. Except in instances where the real estate to be conveyed is a lot in a recorded subdivision, an assessment plat and tax division petition in a form acceptable to the appropriate authorities so the land to be conveyed can be assigned its own permanent real estate index number (PIN) for exemption purposes.

In addition, monuments must be established and the land staked immediately prior to dedication of the property. The subdivider or developer shall pay for the cost of the owner's title insurance in said amount, the ALTA survey, the assessment plat and any and all costs in connection with the tax division.

608.6 Real Estate Tax Escrow: The developer shall pay the general real estate taxes on the land not yet due and payable as of the date of transfer, and shall deposit a sum of money in escrow with the intended grantee's attorney or a title company licensed to do business in the State of Illinois, which is prorated as of the date of transfer on the basis of 110 percent of the tax assessor's latest assessed valuation, the latest known equalization factors and the latest known tax rate on the land. In the event the previous tax information or the previous tax bill includes other property, then the amount to be deposited in escrow shall be adjusted ratably based on the net acreage of the land compared to the net acreage of the other parcels covered by said tax bills. After the land has been divided for real estate tax purposes and has been conveyed to the intended grantee, the grantee shall proceed with due diligence to apply for a real estate tax exemption on the land.

609 OBJECTIONS

All objections relating to acreage requirements, presumptions as to fair market value, the Density Formula or any other application of this Article 6 to a particular subdivision or planned development, shall first be referred to the Planning and Zoning Commission for a hearing. An objection must be made, if at all, prior to the approval of the final plat of subdivision by the City. A failure to object by such time shall constitute a waiver of the right to object to the provisions of this Article 6. All developers submitting a plat of subdivision or resubdivision or a plat of a planned

unit development to the City shall be given a copy of this entire Article 6, including the procedures for objecting to such an assessment as prescribed by this Section 609. Upon receipt, the developer must sign an accompanying document acknowledging that the developer has received notice of the existence of such a procedure for objections. This document entitled *Acknowledgment of Notification of Rights* is attached as Appendix D to this Ordinance and is incorporated herein by reference. The procedure for a hearing before the Planning and Zoning Commission shall be as follows:

609.1 Duties of the Planning and Zoning Commission: The Planning and Zoning Commission shall serve in an advisory capacity and shall have the following duties:

A. Advise and assist the City in resolving objections regarding the Density Formula, the size of the library, park, fire, rescue and school sites in Section 602, respectively, the fair market value of the land used to calculate the cash contribution in Section 603, or any other application of this Article 6 to a particular subdivision or planned development.

B. The City shall adopt procedural rules to be used by the Planning and Zoning Commission in carrying out the duties imposed by this Section 609.

609.2 Information and Services to be Used: the City shall make available to the Planning and Zoning Commission all professional reports relating to the Density Formula, the size of the library, fire, rescue, park and school sites and the fair market value of land used in calculating these cash contributions. The Planning and Zoning Commission may also retain the services of professionals (attorneys, appraisers, statisticians, etc.) to assist in its review of issues raised by any objection.

609.3 Procedure for Resolving an Objection.

A. Upon receipt of an objection, the City Administrator shall place the same on the next regular meeting agenda of the City Council. Thereafter the City Council shall refer the objection to the Planning and Zoning Commission and by resolution establish a hearing date.

B. The Planning and Zoning Commission shall provide public notice of the hearing date to consider the objection and shall notify the affected library, fire protection, rescue, school and park districts by certified mail, return receipt requested, of the filing of the objection and of any hearing regarding same.

C. The Objector shall publish notice of the hearing date once each week for three consecutive weeks, at least 30 days before but no more than 60 days before the scheduled date of the hearing. Notice shall be published in a newspaper of general circulation within the corporate limits of the City. The notice of public hearing shall not appear in the part of the paper where legal notices or classified ads appear. The notice shall not be smaller than one-quarter page of a standard size or tabloid-size newspaper. The objector shall send a copy of said notice to any person who has requested said notice by certified mail (stamped at a U.S. Postal Service facility showing the date of mailing) at least 30 days prior to the hearing date.

D. The notice shall contain all of the following information:
   (1) The headline shall read: "NOTICE OF PUBLIC HEARING ON OBJECTION TO

APPLICATION OF ORDINANCE REQUIRING THE DEDICATION OF SCHOOL SITES, PARK LANDS, FIRE AND RESCUE LANDS AND LIEBRARY LANDS OR PAYMENT OF CASH CONTRIBUTIONS IN LIEU THEREOF AND FIRE AND RESCUE CAPITAL FACILITIES CONTRIBUTIONS.

(2) The date, time and location of the public hearing.

(3) A statement that the purpose of the hearing is to consider the objection to a component of the application of the ORDINANCE REQUIRING THE DEDICATION OF SCHOOL SITES, PARK LANDS, FIRE AND RESCUE LANDS AND LIBRARY LANDS OR PAYMENT OF CASH CONTRIBUTIONS IN LIEU THEREOF AND FIRE AND RESCUE CAPITAL FACILITIES CONTRIBUTIONS.

(4) A general description of the parcel(s), service area or areas within the City that are the subject of the hearing.

(5) A statement that the City shall make available to the public, upon request, an easily understandable and detailed map of the parcel(s), service area or areas to which the Ordinance applies, and any other available information about the objection.

(6) A statement that any member of the public affected by the Ordinance or the parcel(s) or service area shall have the right to appear at the public hearing and present testimony and/or evidence in support of or against the objection.

E. A public hearing shall be held for the consideration of the objection. In addition to the City, any affected library district, school district, park district, fire district and rescue district shall be allowed to participate in such hearing as a party thereto to present evidence, cross-examine witnesses and make arguments to the Planning and Zoning Commission regarding the issues raised in the objection. The Planning and Zoning Commission shall make a recommendation to adopt, reject in whole or in part, or modify the objection presented at the hearing, by written report to the City, within 60 days after the hearing. The City shall then have at least 60 but not more than 120 days to approve, disapprove or modify, by ordinance or resolution, the findings in this ordinance as it pertains to the development in question.

609.3 Costs and Fees. The objector shall bear all costs of the hearing before the Planning and Zoning Commission, including, but not limited to attendance fees paid the Planning and Zoning Commission members, publication costs, professional consultants and any other expenses of the City.

610. CONDITION TO ANNEXATION:

The dedications of land or cash contributions in lieu thereof required by this Article 6 shall also be required as a condition to the annexation of any land to the City, and provisions therefore shall at a minimum be incorporated in any annexation or pre-annexation agreement governing such land. However, the City reserves the right to negotiate dedications of land or cash contributions in lieu of land or a combination thereof different than those set forth herein.

611. INDEMNIFICATION:

As a condition to the City distributing land dedications and/or cash contributions in lieu thereof, the appropriate district shall execute an indemnification agreement in the form set forth in Appendix A of this Article 6. This agreement shall be executed on or before June 1st of each year. Following execution of this agreement by the appropriate district, this indemnification agreement shall be furnished to the City. In the event the appropriate district fails to execute and/or furnish the executed agreement as required in this Article 6, the City reserves the right to refuse to impose any land dedications and/or cash contributions in lieu thereof.

612. DISTRIBUTION:

The cash contribution in lieu of land dedication imposed by this ordinance shall be collected and held by the benefiting district to be used for the purposes set forth in this ordinance.

As a condition of distribution of these land dedications and/or cash contributions in lieu of land dedications, the City shall require that the school district, library district, park and recreation district, fire protection district or rescue district benefiting from such land dedications and/or cash contributions conduct a needs assessment and adopt a comprehensive or long range plan for acquisition of land and capital facilities needed to accommodate growth.

612.1 Needs Assessment; Land and Capital Facilities Acquisition Plan. A needs assessment shall contain the following information for each district (school, library, fire, rescue and park):

A. A description of the nature and location of existing park, library, fire, rescue and school lands and existing park, school, library, fire, rescue facilities within each district.

B. An identification of the capacity of each school building, fire protection facility, rescue facility, library facility or park site within the particular district and of the number of students then enrolled in each school building.

C. A projection of the character and location of new development that is expected to occur within each district or City during the succeeding 10-year period. The district may obtain the information necessary to make this projection from sources such as but not limited to: municipalities, other units of government, agencies and consultants.

D. An identification of the amount of lands that will be necessary within the district in order to accommodate the demands of such projected new development, and an estimate of the public grounds acquisition costs that will be incurred or have been incurred by each district in acquiring such lands.

E. A general description of each classification of capital facilities (including construction, expansion or enhancement of any public facilities and the land improvement, design, engineering and professional costs related thereto) that will be necessary within each district in order to provide adequate capacity for the projected new development, and an estimate of the capital facilities costs that will be incurred by each district in constructing such capital facilities.

612.2 Based upon the needs assessment, the school district, fire protection district, rescue district, park and recreation district or library district shall provide the City an acquisition plan for lands and capital facilities. This acquisition plan shall:

A. Project for a planning period of at least five years, the need for lands and capital facilities within the district or City;

B. Set forth a schedule for the acquisition of such lands and facilities to meet the projected need (which schedule may be conditioned upon the availability of financing);

C. Indicate the size and general location of the needed lands and facilities;

D. Identify the estimated or incurred costs of acquiring such needed lands and facilities;

E. Set forth the anticipated funding sources for the acquisition of such needed lands and facilities;

F. Determine the feasibility of acquiring the needed land and facilities based upon the district's current financial condition;

G. Determine the feasibility of acquiring the needed land and facilities based upon the district's or City's estimate of the revenues (including, without limitation, cash in lieu of land dedication required by this Article 6) pursuant to the plan.

H. The impact on property taxes in the City assuming the plan is implemented.

612.3 If the City deems it necessary, it may require an updated needs assessment and plan for acquisition of land and capital facilities from the district annually. The failure to require said assessment update shall not invalidate the requirements of this Section 609.

613. TIME OF PAYMENT:

All land dedications and cash contributions imposed by this Article 6 shall be due and payable upon final plat approval. For any lot which received final plat approval prior to the enactment of this Ordinance and which remains vacant at the time this Ordinance is enacted, all dedications and fees imposed by this Article 6 shall be calculated and shall be due and payable at the time a building permit is issued. At the time of payment (at time of final plat approval or at time of building permit issuance), the subdivider or developer shall receive a copy of this Article 6 and shall execute an acknowledgment that a copy of Article 6 has been received. The executed acknowledgment shall be maintained and filed along with documents evidencing proof of land dedication or payment of cash contributions in lieu of land dedication by each subdivider or developer.

613.1 *Payment at Time of Platting.* In calculating the cash contributions to be paid at the time of platting, the City will assume the maximum density permitted under the zoning classification approved pursuant to the Density Formula. For example, if the subdivision in question is zoned single family, the City will assume for purposes of calculating cash

contributions payable, pursuant to this Ordinance, that all houses will have four or more bedrooms. The benefiting district will then hold sufficient funds pending issuance of the building permit to enable it to refund without interest any overpayments resulting from the fact that houses with less than four bedrooms are constructed. The City will direct the benefiting district to refund any overpayments resulting from the fact that houses with less than four bedrooms are constructed. Refunds bearing no interest shall be made at time of issuance of the building permit. The City will not issue any refunds for any residences platted but never built.

613.2 *Payment at Time of Building Permit Issuance.* The City may agree that the payment of the cash contributions may be made at the time of building permit issuance in consideration of which the subdivider or developer shall execute an Agreement, similar in form and content to Exhibit B-3 (Appendix B) of this Ordinance. The Agreement provides: (a) that the cash contributions payable will be adjusted in accordance with the requirements herein; (b) that the cash contributions may be expended for the purposes described in Exhibit B-3; and (c) to accept the validity of this Article 6 and the cash contributions as calculated. This Agreement, or memorandum thereof, shall be recorded along with the Plat of Subdivision upon approval by the City.

In the event the City agrees to delay the payment of fees and cash contributions required herein to the time of building permit issuance, the fees and cash contributions owed shall be those that are in effect at the time the building permit is issued.

Article 7

ADMINISTRATION AND ENFORCEMENT

701 General

701.1 Authority to Review. The City of Marengo City Council grants the City Engineer, the City Attorney, the Building Commissioner, Chief of Police, and other City staff the power and authority to review and recommend approval or disapproval of plats for the subdivision of land within its jurisdiction.

701.2 Law Compliance. All laws of the State of Illinois are made a part hereof, the same as if fully set forth herein, and all officers and employees of the City are directed to compel compliance with such laws of the State of Illinois.

701.3 Plat Approval. No Plat of Subdivision shall be approved which does not comply with all of the provisions of this Ordinance.

701.4 Recording of Plat. The City Clerk shall not record any subdivision plat within the City or its 1.5 mile planning jurisdiction unless it has been approved by the City of Marengo City Council.

701.5 Plat Violations. Whenever it shall come to the knowledge of the City Clerk that any provisions of the State law governing plats have been violated, it shall be the City Clerk's duty to notify the City Attorney, who shall take appropriate action.

701.6 Ordinance Enforcement. It shall be the duty of the City Engineer, City Attorney, the Building Commissioner, and other City staff to enforce this Ordinance; to bring to the attention of the City Council any violations or lack of compliance with this Ordinance; and to take appropriate action in the case of violations.

701.7 Cost of Compliance. Unless otherwise provided, the costs of complying with any of the standards in this Ordinance shall be at the owner's expense.

702 Violations and Penalties

702.1 Illegal to Transfer. No owner or agent of the owner of any land located in a proposed subdivision shall transfer, sell, lease or offer for sale or lease any such land before a Final Plat of such subdivision has been approved in accordance with the provisions of this Ordinance and recorded. Whoever shall sell or lease or offer for sale or lease, any lot or block in any subdivision before complying with all of the requirements of these shall be subject to a fine of a minimum of $100 for each lot so disposed or offered. Each day that sales or leasing or offers to sell or lease, continue in violation of these regulations shall constitute a separate offense, subject to the penalty of

this Subsection. The City shall seek such injunctive relief as is available under the laws of the state.

702.2 No Metes and Bounds. The subdivision of any lot or any parcel of land by the use of metes and bounds descriptions for the purpose of sale, transfer or lease, with the intent of evading these regulations, shall not be permitted. All such described subdivisions shall be subject to all of the requirements in this Ordinance.

703 Variations and Exceptions

The Planning and Zoning Commission may recommend variations from these requirements in specific cases which, in its opinion, do not affect the intent of this Ordinance. Such recommendations shall be communicated to the City Council or the governing County authorities in writing with the reasons therefore. The City Council or the County authorities may then approve variations from these requirements in specific cases which, in its opinion, do not affect the intent of this Ordinance.

704 Separate Publication

This Ordinance shall be published in pamphlet form by and under the authority of the City of Marengo.

705 Engineering Drawings and Guarantees

705.1 Engineering Drawings. Prior to the Planning and Zoning Commission's approval of the Final Plat, the developer shall submit Engineering Drawings in accordance with Appendix A demonstrating that any proposed street, water or sewer line and related facility, stormwater drainage facility and/or other engineered facility complies with the standards in this Ordinance and with good engineering practices.

705.2 Construction Supervision. The developer shall employ a registered professional engineer who shall be responsible for overseeing the project to assure that construction of the engineering improvements substantially complies with the approved plans and specifications. No improvements shall be started until the Final Plat has been approved by the City, guarantees posted, the Plat recorded, and sufficient copies supplied to the City Hall and all Department heads, and approved Watershed Development Permit issued by the Building Commissioner and Public Works Director, a pre-construction meeting held with all applicable parties and erosion control measures installed and inspected by City Staff.

705.3 Maintenance of Improvements. The developer shall be responsible for maintaining all improvements until they are accepted by the appropriate governmental entity. Maintenance shall include snow plowing of streets to ensure adequate access to any lots that have been sold.

705.4 Estimate of Costs. Prior to the Planning and Zoning Commission's approval of the Final Plat, the developer shall prepare an estimate of costs of any improvements

proposed or otherwise related to the Final Plat, including off-site improvements. These improvements shall include any streets, water or sewer facilities, storm drainage facilities, park and recreation facilities, landscaping, and other facilities which will be dedicated or set aside for a public or quasi-public use. Such an estimate will be provided by a person or persons qualified to design the facilities and be approved by the City Engineer. The estimate for street, water, sewer and stormwater facilities shall be provided by a registered professional engineer.

705.5 Amount of Performance Guarantee. The developer shall provide a performance guarantee in a manner as set out below in an amount sufficient to address 125 percent of the estimate of costs. The purpose of the performance guarantee is to ensure the adequate completion of the improvements in a manner shown on the Final Plat and Engineering Drawings. In the event that some or all of the improvements will be covered by a performance guarantee to another government agency, no guarantee will be required for such improvements. Any guarantee shall be in effect for one year. Additional renewals may be allowed with the consent of the City Council.

705.6 Partial Release. Upon substantial completion of part or all of the required improvements, as certified to by the developer's engineer, the developer may request in writing a release from those improvements. The City Engineer and City staff shall inspect the improvements of which such notice has been given and shall determine whether the improvements were completed in accordance with approved plans. The City Council shall review the City Engineer and City staff's recommendations and shall determine whether to allow the guarantee to be reduced by the amount in the estimate which is reflected by the successfully completed improvements.

705.7 Complete Release. Upon completion of all the improvements, the developer shall submit to the City, City Engineer, and City staff "as-built" plat and engineering drawings certified to by the developer's engineer. The "as-built" drawings shall be provided in digital format compatible with the City's GIS system. The City Engineer shall review the same and determine whether the improvements are consistent with the engineering drawings. The City Council shall review the same and determine whether to accept or, in the case of facilities not dedicated to the public, approve the facilities. If the City Council accepts or approves the improvements, the City shall either allow the guarantee to be reduced to 10 percent of the guarantee amount, the remaining amount constituting a maintenance guarantee for a period of two years, or allow a new maintenance bond for 10 percent of the guarantee amount, for a period of two years.

705.8 Types of Guarantees. Performance and maintenance guarantees shall be provided by a variety of means including, but not limited to, the following:

A. *Letter of Credit.* The developer may provide an irrevocable letter of credit from a bank or other reputable institution.

B. *Escrow Account.* The developer may deposit cash or their instruments readily convertible into cash at face value with the municipality.

705.9 Completion of Improvements. All improvements proposed or otherwise related to the Final Plat, including off site improvements, except for bituminous surface improvements and seeding, shall be completed within one year after approval of the Final Plat by the City. The bituminous surface improvements and seeding, shall be completed within 10 months after approval of the Final Plat. Time is of the essence. Only under extreme conditions may the letter of credit be extended by the City in its sole discretion. Any extension must first be approved by the City Council. It shall be the obligation of the developer to request such an extension in a timely manner, at least 30 days prior to the expiration of the guarantee, if any.

Article 8

PLAT CERTIFICATES, TAX SEARCH, RETAINED PERSONNEL FEES AND OTHER MISCELLANEOUS REQUIREMENTS

801 General Requirement

Every Final Plat will include those certificates necessary to demonstrate compliance with this ordinance and as required for recordation by the County in a form suitable to both the City and the County.

801.1 State Plane Coordinates. All Plats of Subdivision shall be submitted to the City on a 24" by 34" mylar for recording purposes. It shall also be submitted by to the City Engineer in electronic format on a 3 ½ diskette or CD Rom which can be read by an IBM compatible computer in DWG (AutoCAD) format. All coordinates shall be based upon State Plan Coordinates and U.S.G.S. Datum and shall tie into at least two of the six existing monuments as set by the City Engineer and referenced on Control Diagram dated June 12, 1997, prepared by Smith Engineering Consultants, Inc. Specific electronic layers are required, and the City Engineer should be contacted for more information before surveying and plat preparation takes place.

Every final plat shall include those certificates necessary to demonstrate compliance with this Subdivision Ordinance and as required for recordation by the County in a form suitable to both the City and the County.

802 Required Certificates – Preliminary Plats

802.1 Preliminary Plat Approval by the Planning and Zoning Commission. The Preliminary Plat must be approved by the Planning and Zoning Commission. A certificate indicating such approval, to be signed by the Chairperson, shall be placed on the Plat. The following wording is required:

PLAN COMMISSIONER'S APPROVAL

STATE OF ILLINOIS)
)SS
COUNTY OF MCHENRY)

Preliminary Plat approved by the Planning and Zoning Commission of the City of Marengo this day of month (month), 20(year).

802.2 City Engineer's Approval. All Preliminary Plats must be approved by, the City Engineer. A certificate indicating such approval shall be placed on the Preliminary Plat. The following wording is required:

CITY ENGINEER'S APPROVAL

STATE OF ILLINOIS)
)SS
COUNTY OF MCHENRY)

My signature, as City Engineer for the City of Marengo, indicates that, to the best of my knowledge, this Preliminary Plat meets all the requirements of City Ordinances.
Signed this _____day of (month), 20(year).

_____(signature)_____
City Engineer

802.3 Soil Classifier's Certification. The signature of the Soil Classifier who did the on-site investigation and prepared the soil map shall be affixed to both sheets of the Preliminary Plat. The following wording is required:

SOIL CLASSIFIER'S CERTIFICATE

I, _____(name)_____hereby certify that the soil mapping represented on Sheet 2 was done by me in accordance with the City of Marengo Subdivision Ordinance. I further certify that my qualifications to do that work comply with the requirements of *Subsection 608.4 of the City of Marengo Subdivision Ordinance.*

_____(date)_____ _____(signature)_____

802.4 City Council's Approval. When a Preliminary Plat has been approved by the City Council, the following statement will be placed on the Plat, dated and signed by the Mayor:

APPROVAL OF PRELIMINARY PLAT

Preliminary Plat approved by the City Council of the City of Marengo this day of month (month), 20(year).

By _____
MAYOR

Note: This approved Preliminary Plat must be submitted with the Final Plat on or before the day of month (month), 20(year). Failure to submit the Final Plat for one or more phases of the subdivision within one year from the above date will void this approval of Preliminary Plat.

803 Required Certificates – Final Plat

803.1 Certificate Indicating Final Plat Approval by Planning and Zoning Commission. The Final Plat must be approved by the Planning and Zoning Commission. A certificate

indicating such approval, to be signed by the Chair person, shall be placed on the Plat. The following wording is required:

APPROVAL BY THE PLANNING AND ZONING COMMISSION

Approved by the Planning and Zoning Commission of the City of Marengo this _____day of (month), 20(year).

_____(signature)_____
Chairperson

803.2 Owner's Certificate and Notary Certificate. A certificate shall be placed on the Final Plat indicating the ownership of the land being subdivided. A notary certificate shall be placed beneath the owner's certificate in witness of the owner's signature. The following general wording of these two certificates is required:

OWNER'S CERTIFICATE

STATE OF ILLINOIS)
)SS
COUNTY OF MCHENRY)

This is to certify that the undersigned, _____(list names)_____, is [are] the legal owner[s] of the land described on the Plat hereon drawn and shown hereon as subdivided; that he [they] has [have] caused said land to be surveyed, subdivided, staked and platted as shown hereon, for the purpose of having this Plat recorded as provided by law; and to the best of my [our] knowledge and belief the drainage of surface waters will not be changed by the construction of such subdivision or part thereof, or that if such surface water drainage will be changed; reasonable provision has been made for the collection and diversion of such surface waters into public areas, or drains which the subdivider has a right to use, and that such surface waters will be planned for in accordance with generally accepted engineering practices so as to reduce the likelihood of damage to the adjoining property because of the construction of the subdivision.

In witness whereof I [we] have hereto set my [our] hand[s] and seal[s] this _____day of _____(month)_____, 20(year).

_____(Seal)

_____(Seal)

NOTARY'S CERTIFICATE

STATE OF ILLINOIS)
)SS
COUNTY OF MCHENRY)

I, the undersigned, a Notary Public in and for the county and state aforesaid, do hereby certify that _____ of _____ personally known to me to be the same person or persons whose name or names are subscribed to the foregoing instrument as, _____ respectively appeared before me this day in person and acknowledged that they signed and delivered the said instrument as their own free and voluntary act of said company for the uses and purposes therein set forth and said secretary

did also then and there acknowledge that he or she as custodian of the corporate seal of said company did affix the said corporate seal of said company to the said instrument as his or her own free voluntary act, and as the free and voluntary act of said company for the uses and purposes set forth.

Given under my hand and notarial seal, this _____day of _____(month)___ 20(year).

(Seal) _____
Notary Public

803.3 School District Certificate. Pursuant to Section 1 of the Illinois Plat Act, an owner shall submit simultaneously with the subdivision plat a notarized statement indicating to the best of the owner's knowledge, the school district in which each tract, parcel, lot or block lies. This submission can be on a separate paper accompanying the plat or on the plat. If submitted as a separate certificate, the following wording is required:

SCHOOL DISTRICT CERTIFICATE

This is to certify that I, _____, as owner of the property described in the _____ Subdivision and legally described on the plat of the same name, have determined to the best of my knowledge the school district in which each of the following lots lie:

Lot Number(s)	School Districts Elementary	High School

_____
Signature of Owner

SUBSCRIBED AND SWORN to before me
This ____day of _____, 20_____

_____
Notary Public

803.4 Surveyor's Certificate. The surveyor who prepared the Final Plat shall place thereon a certificate with the following wording:

SURVEYOR'S CERTIFICATE

STATE OF ILLINOIS)
)SS
COUNTY OF MCHENRY)

I, _____, an Illinois Registered Land Surveyor do hereby certify that I have surveyed and subdivided the following described property, and that the Plat hereon drawn is a correct representation thereof, all distances are shown in feet and decimal parts thereof.

(Insert Legal Description)

Containing total area, including R.O.W.'s: (in square feet and acres)

This is also to certify that upon completion of construction, concrete monuments, as shown, and iron pipes at all lot corners and points of change in alignment will be set, as required by the Plat Act (765 ILCS 205/0.01 et seq.). This is also to certify that the property, as described in the annexed Plat, lies within the corporate limits of the City of Marengo, Illinois, which has adopted a comprehensive plan.

Given under my hand and seal at _____, Illinois this _____day of _____(month)___, 20(year).

Illinois Registered Professional Land Surveyor No. _____

803.5 Certificate Regarding Flood Hazard. In accordance with the Recorder's Act (55 ILCS 5/3-5001 et seq.) the surveyor shall determine if any part of the proposed subdivision lies within a flood hazard area as identified by the Federal Emergency Management Agency. An appropriate certificate shall be placed on the Plat and signed by the surveyor. The following wording is required, depending on which situation exists.

FLOOD HAZARD CERTIFICATE

I certify that none of the above described property is located in a flood hazard area as identified by the Federal Emergency Management Agency.

_____(signature)_____
Illinois Registered Land Surveyor

OR

I certify that none of the above described property as subdivided is located in a flood hazard area as identified by the Federal Emergency Management Agency except as indicated on FEMA Floodway Map, McHenry County, Illinois, Community Panel Number _____, effective date _____.

Given under my hand and seal at _____, Illinois this _____day of _____(month)___, 20(year).

Illinois Registered Professional Land Surveyor No. _____

803.6 McHenry County Department of Health Certificate. The Plat Act, as amended January 1, 1988, requires the local health department, if one exists, to sign a Plat with respect to sewage disposal systems if any lots will not be served by a public sewer system. The following wording is required:

DEPARTMENT OF HEALTH CERTIFICATE

No public sewer system exists to serve this subdivision. Septic system suitability has been determined for all platted lots in accordance with the pertinent sections of the McHenry County Subdivision Ordinance.

_____(signature)_____
Public Health Administrator

803.7 County Clerk's Certificate. The County Clerk shall make a tax search of the land being subdivided (*See Section 804*). A certificate is required on all Final Plats,

indicating that any back taxes and the required tax search fees have been paid. The following wording is required.

COUNTY CLERK'S CERTIFICATE

STATE OF ILLINOIS)
)SS
COUNTY OF MCHENRY)

I, _____, County Clerk in McHenry County, Illinois do hereby certify that there are no delinquent general taxes, no unpaid current general taxes, no unpaid forfeited taxes, and no redeemable tax against any of the land included in the Plat.

I further certify that I have received all statutory fees in connection with the Plat.

Given under my hand and seal of the County at Woodstock, Illinois, this _____day of _____(month)___, 20(year).

_____(signature)_____
McHenry County Clerk

803.8 City Engineer's Certificate. A certificate shall be placed on the Final Plat to indicate the approval of the City Engineer. The following wording shall be used:

CITY ENGINEER'S CERTIFICATE

STATE OF ILLINOIS)
)SS
COUNTY OF MCHENRY)

The undersigned, as City Engineer for the City of Marengo, and relying upon the following certification of the City Clerk:

> I certify that an irrevocable letter of credit for completion of this subdivision's improvements has been deposited with my office on _____day of ____(month)___, 20(year).
>
> _____
> City Clerk
>
> Hereby confirm that to the best of my knowledge, this Plat of Subdivision meets all the requirements of the ordinances of the City of Marengo as of this _____day of ____(month)___, 20(year). The City Engineer shall not sign the Plat until notification is received from the City Clerk that the subdivision improvement financial guarantee has been received by the City.
>
> _____
> City Engineer

803.9 McHenry County Stormwater Management Certificate. A certificate shall be placed on the Final Plat to indicate the approval of the City Enforcement Officer. The following wording shall be used:

MCHENRY COUNTY STORMWATER
MANAGEMENT CERTIFICATE

STATE OF ILLINOIS)
)SS
COUNTY OF MCHENRY)

The undersigned, as City Engineer for the City of Marengo, and relying Upon the following certification of the City Clerk:

The undersigned, acting as the City's Enforcement Officer , do hereby certify this Plat of Subdivision complies with the McHenry County Stormwater Management Ordinance, as modified by the City of Marengo.

_____ Date: _____
Enforcement Officer

803.10 City Council's Certificate. A certificate shall be provided to indicate approval of the Final Plat by the City Council. Space for the signature of the Mayor and the Clerk shall be provided. The following wording is required:

CITY COUNCIL'S APPROVAL

STATE OF ILLINOIS)
)SS
COUNTY OF MCHENRY)

This Plat and dedications shown hereon are hereby approved by the City Council of Marengo, Illinois, at a meeting held on the _____ day of __(month)____, 20(year).

_____
City Mayor

Attest: _____
City Clerk

803.11 Recorder's Certificate. A certificate shall be placed on the Final Plat to indicate the date and time of recording, and the book and page on which recorded. The following wording is required:

RECORDER'S CERTIFICATE

STATE OF ILLINOIS)
)SS
COUNTY OF MCHENRY)

This instrument filed for record in the Recorder's office of McHenry County, Illinois, on this _____ day of __(month)____, 20(year), at ____ o'clock ___ M. and recorded as Document Number _____.

_____
County Recorder

803.12 Easement Crossing Certificate. A certificate shall be placed on the Final Plat to allow easement crossings. The following wording is required:

EASEMENT CROSSING PROVISIONS

All easements indicated as road construction and maintenance easements adjacent to road right-of-ways on this Plat are reserved for and granted to the City of Marengo, their successors and assigns, for road construction and maintenance including maintenance of drainage ditches and slopes. Said easements may be crossed perpendicularly by driveways and utilities and drainage or retention/detention easement with the consent of the grantor. Said grantor reserves the right to cut, trim, or remove trees, bushes and roots as may be reasonably required incident to the rights herein given, and the right to enter upon said property for all such purposes.

_____ Date: _____
Owner

803.13 City Treasurer. A certificate shall be placed on the final Plat indicating that there are no delinquent or unpaid obligations to the City. In the absence of the City Treasurer, the City Administrator can sign the following certificate. The following general wording is required:

CITY TREASURER'S CERTIFICATE

My signature, as Treasurer of the City of Marengo, certifies that there are no delinquent or unpaid, current or forfeited special assessments or any deferred installment thereof that has been apportioned against the land included in this Plat of Subdivision.

_____ Date: _____
City Treasurer

803.14 Road Certificate(s). If interior subdivision streets or roads access upon a county, township or state road, the following certificate(s) shall be included on the Final Plat:

ROAD CERTIFICATE

STATE OF ILLINOIS)
)SS
COUNTY OF MCHENRY)

Approved this _____ day of __(month)____, 20(year), as to roadway access to (County/State/Township) Highway No. _____ also known as _____.

(Signed)
County Engineer
and/or
Illinois Department of Transportation
and/or
Township Highway Commissioner

803.15 State of Illinois Certificate. In accordance with the Illinois Regulation of Rivers, Lakes and Streams (615 ILCS 5/7), if a subdivision borders upon or, includes any public waters in which the State of Illinois has any property rights or property interests, it must

have a boundary line indicated between the private interests and the public interests. The proposed boundary line must be reviewed and approved by the Illinois Department of Transportation, Division of Water Resources for the special certificate that must be placed on the Final Plat to indicate that the boundary line has been approved.

STATE OF ILLINOIS CERTIFICATE

STATE OF ILLINOIS)
)SS
COUNTY OF MCHENRY)

Approved by the Department of Transportation of the State of Illinois insofar as this Subdivision Plat, showing lands bordering upon or including public waters of the State of Illinois, relates to the provisions of *Section 7 of An Act in Relation to the Regulation of Rivers, Lakes, and Streams of the State of Illinois* approved June 10, 1911, as amended, requiring review and approval by said Department as to the boundary line between private interests and public interests.

I further certify that I have received all statutory fees in connection with the annexed Plat.

Dates at Springfield, Illinois, this _____day of _____(month)___, 20(year).

Approval recommended: _____
Director, Division of Water Resources

State of Illinois, by its Department of Transportation

By: _____
Secretary

803.16 Developer Contribution. The following notice shall be placed on all Final Plats of Subdivision:

NOTICE

All of the property described herein and platted in lots, blocks and other parcels of units may be subject to a dedication of land or a payment in lieu of land pursuant to Article 6 of the Marengo Subdivision Ordinance at the time of application for building permit.

803.17 Compliance with Approved Building Plans. The following notice shall be placed on all Final Plats of Subdivision:

NOTICE

All building plans and architectural elevations for structures to be built in the subdivision as presented to the City of Marengo and approved as part of the Final Plat of Subdivision shall be submitted by the City Clerk to the Recorder's Office of McHenry County, Illinois and recorded together with either the declaration of covenants or homeowners association bylaws for the subdivision, or recorded as a separate document. All final building plans submitted to the City for construction approval shall conform to the plans and elevations as contained in the recorded

documents. Changes to building plans and elevations may be permitted upon approval by the City of Marengo.

804 Tax Search

Before a Final Plat may be submitted to the City Council, the owner shall make all payments of any and all taxes and special assessments levied against the property being platted by him. In vacating subdivisions previously platted, the petitioner shall submit evidence of the payment of all taxes and special assessments levied against the property in the same manner as is required for subdividing (see Subsection 803.7).

805 Retained Personnel Fees

The developer shall pay and reimburse the City for any and all expenses it incurs and for any fees directly or indirectly incurred or charged to the City by virtue of the review of any Concept, Preliminary, Final Subdivision Plat, Engineering Drawings, and any inspection fees or charges relating to services provided to confirm that subdivision improvements conform to the requirements of the Marengo Subdivision Ordinance, including without limitation copying expense, recording fees, publication expenses and expenses of retained personnel. Retained personnel shall be defined as any engineer, planner, attorney, or other technical professional, or paraprofessional person, firm, or corporation utilized by the City to assist or advise the City directly or indirectly in planning, reviewing, or evaluating, advising, approving, accepting, or inspecting any subdivision of the City. The City shall require the developer to deposit into an account, under the control and authority of the City, fees found in Appendix H.

No proceeding shall occur until required fees are paid in accordance with this Ordinance.

The money deposited pursuant to the terms of this Ordinance shall be retained by the City as security to guarantee that all fees and expenses will be paid by the developer. Retained personnel shall issue bills or invoices for services rendered in conjunction with a particular subdivision to the City. The developer shall pay invoices directly to the City.

If at any time the City Clerk receives notice from an of the City's retained personnel that an invoice for services rendered, with respect to a particular subdivision and with respect to which a copy of said invoice has been forwarded to the particular developer, is unpaid and outstanding for a minimum of 30 days, the City Clerk shall be authorized to pay said invoice directly from the escrow account and shall contemporaneously send notice to the developer that all further proceedings shall be stayed until the original amount of the escrow is reestablished. Notice to the developer may be by regular mail.

Upon approval and recording of the Final Plat, the Clerk shall confirm that all expenses and fees directly or indirectly incurred with respect to the subdivision have been paid without expenses to the general fund of the City, and shall provide an account of any fees or expenses directly paid from the escrow. Thereafter; the escrow shall be retained at 50 percent of the amount originally, established and shall be held as security to confirm that on-site review and inspection from the City Engineer or other retained personnel is paid in accordance with the procedure outlined above in this Section. Upon final acceptance of subdivision improvements, any balance retained in the escrow shall be paid forthwith to the developer. Funds deposited in

escrow as established pursuant to this Section shall not accrue interest for the benefit of the developer.

806 Filing Fee: Preliminary Plat

The developer shall pay to the City at the time of the filing of the preliminary flat a filing fee (see Appendix H for fee amount)

Article 9

DEFINITIONS

901 General

For the purposes of uniform interpretation of this Ordinance, certain terms and phrases shall be deemed to have the meaning ascribed to them in this Section. The words "shall" and "must" indicate mandatory items, while the word "may" indicates optional items.

902 Listing of Definitions

ADVERSE IMPACTS. Any deleterious impact on water resources or wetlands affecting their conditions or beneficial uses including recreation, aesthetics, aquatic habitat, quality, and quantity.

ALLEY. A public or private improved roadway intended to provide supplementary public access to the rear of a lot.

AWWA. American Water Works Association.

APPLICANT. Any person, firm, or governmental agency who executes the necessary forms to procure official approval of a development or permit to carry out construction of a development from the City of Marengo.

AUTHORITY. The appropriate reviewing authority as set out in this Ordinance.

BASE FLOOD ELEVATION. The elevation at all locations delineating the level of flooding resulting from the 100-year frequency flood event.

BUFFER. An area that preserves, provides access to, or otherwise serves as a necessary adjunct to natural areas by protecting streams, lakes, wetlands, soil, air, and habitat. Land that includes, but is not limited to, areas with predominantly deeply rooted native vegetated land adjacent to channels, wetlands, or lakes for the purpose of stabilizing banks, reducing contaminants including sediments in storm water that flows to such areas.

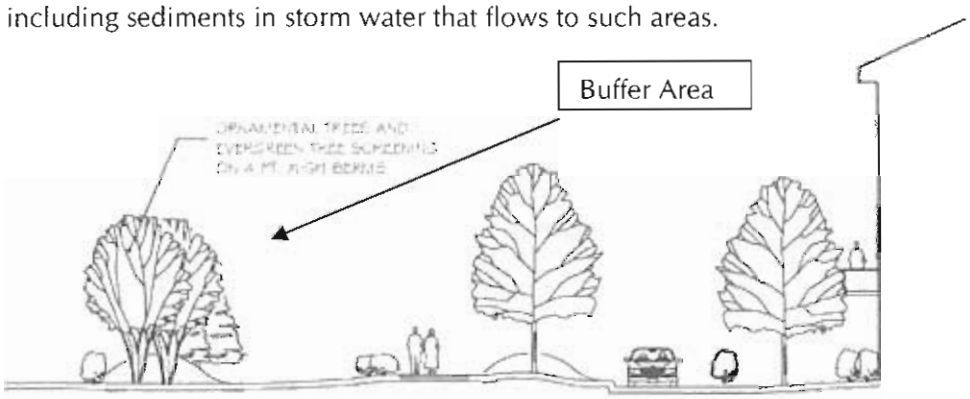

An example of a buffer (with berm) between residential and natural areas

BUILDING. Any structure having a roof supported by columns or walls which is built, used, or intended for the support, shelter, or enclosure of persons, animals, or property of any kind.

BUILDING COMMISSIONER. The person approved by the City Council as the building official for the City of Marengo.

BYPASS FLOWS. Stormwater runoff from upstream properties tributary to a property's drainage system but not under its control.

CABLE TELEVISION (CATV) COMPANY. A person, firm or corporation who has obtained a franchise from the appropriate unit of local government to provide television signals for subscriber use via permanently installed coaxial cable.

CHANNEL. Any river, stream, creek, brook, branch, natural or artificial depression, ponded area, flowage, slough, ditch, conduit, culvert, gully, ravine, wash, or natural or manmade drainageway, which has a definite bed and bank or shoreline, in or into which-surface or groundwater flows perennially or intermittently.

CHANNEL MODIFICATION. Alteration of a channel by changing the physical dimensions or materials of its bed or banks. The alteration includes, but is not limited to damming, riprapping (or other armoring), widening, deepening, straightening, relocating, lining, and significant removal of bottom or I woody rooted vegetation. An alteration that does not include the clearing of debris or removal of trash.

CHIEF OF POLICE. Person approved by the City Council as department head of the Police Department.

CITY. The City of Marengo, McHenry County, Illinois.

CITY ADMINISTRATOR. The City Administrator of the City of Marengo.

CITY ATTORNEY. The current City Attorney of the City of Marengo.

CITY CLERK. The duly appointed Clerk of the City of Marengo; also sometimes referred to as the Clerk.

CITY COUNCIL. The City Council of the City of Marengo.

CITY ENGINEER. The current City Engineer of the City who shall at all times act as an adviser to the Planning and Zoning Commission and to the City Council.

CITY STAFF COMMITTEE. A committee composed of selected City administrative and technical staff including the Building Commissioner, City Clerk, Chief of Police, Superintendent of Streets Department, Superintendent of Water/Sewer Department, and retained personnel.

COMMUNITY WATER OR SEWER SYSTEM. A system serving more than one dwelling unit, principal use or lot and owned and operated by a utility, homeowners association or similar entity.

COMPENSATORY STORAGE. An artificially excavated, hydraulically equivalent volume of storage within the floodplain used to balance the loss of natural flood storage capacity when fill or structures are placed within the floodplain.

COMPREHENSIVE PLAN. The City of Marengo Comprehensive Plan, 2004, as amended.

CONCEPT PLAN. A graphic exhibit which shows basic resource features, proposed lot divisions, roadway layout and general drainage features of a proposed subdivision. The purpose of the Concept Plan is to explore alternative subdivision arrangements prior to investing time and money on detailed drawings of an arrangement which may not be acceptable.

CONDUIT. Any channel, pipe, sewer or culvert, etc., used for the conveyance or movement of water, wastewater, electric, telephone, gas or other utilities, whether open or closed.

CONGRESSIONAL SURVEY TOWNSHIP. An area approximately 6 miles square identified by its unique township and range numbers With respect to a designated principal meridian and base line.

CONVENTIONAL PRIVATE SEWAGE DISPOSAL SYSTEM: An individual system employing a septic tank and the soil treatment system, commonly known as seepage trenches that are partially or wholly in original soil material.

COUNTY. McHenry County, Illinois.

COUNTY CLERK. The elected or appointed County Clerk of McHenry County, Illinois.

COUNTY ENGINEER (SUPERINTENDENT OF HIGHWAYS). The appointed head of the McHenry County Highway Department.

CRITICAL SOIL. Earth materials that have been disturbed and/or have natural limitations extensive enough to require alternative systems or are perhaps so limited as to preclude the practicality of on-site wastewater treatment.

CUL-DE-SAC. A publicly dedicated, minor residential street with a single outlet which is permanently terminated by a vehicle turnaround and which meets the standards set out in Section 303.2 of this Ordinance.

DATE OF COMPLETED APPLICATION. The date the applicant submits the application, or the date the applicant submits the last item of substantial supporting data, whichever date is later.

DAYS. For the purpose of this Ordinance shall mean business days, not including state and federal holidays.

DESIGN REQUIREMENTS FOR SUBDIVISION STREETS. The Schedule of Minimum Design Requirements for Subdivision Streets in the City of Marengo (Section 303 of this Ordinance, sometimes referred to in Article 3 as merely Design Requirements).

DETENTION BASIN. A facility constructed or modified to provide for the temporary storage of stormwater runoff-and the controlled release by gravity of this runoff at a prescribed rate during and after a flood or storm.

DETENTION POND. A permanent natural or man-made structure for the temporary storage of run-off, which consists of a permanent pool of water.

DETENTION TIME. The mean residence time of stormwater in a detention basin.

DEVELOPER. The owner or entity proposing to develop the property.

DEVELOPMENT. Any man-made change to real estate, including:

A. Preparation of a Plat of Subdivision;

B. Construction, reconstruction or placement of a building or any addition to a building;

C. Installation of a manufactured home on a site, preparing a site for a manufactured home, or installing a travel trailer on a site for more than 180 days;

D. Construction of streets, bridges, or similar projects;

E. Redevelopment of a site;

F. Filling, dredging, grading, clearing, excavating, paving, or other non-agricultural alterations of the ground surface;

G. Storage of materials or deposit of solid or liquid waste; and

H. Any other activity that might alter the magnitude, frequency, deviation, direction, or velocity of stormwater flows from a property.

DRAINAGE PLAN. A plan including engineering drawings and supporting calculations, which describes the existing stormwater drainage system and environmental features, as well as the drainage system and environmental features which are proposed after development of a property.

DRY BASIN. A detention basin designed to drain completely after temporary storage of stormwater flows and to normally be dry over the majority of its bottom area.

EASEMENT. A right to the use of land by the public, a corporation, or persons for specific purposes such as the construction of utilities or roadways.

EROSION. The general process whereby earth is removed by flowing water or wave action.

EXCESS STORMWATER RUNOFF. The volume and rate of flow of stormwater discharged from an urbanized drainage area which is or will be in excess of that volume and rate which pertained before urbanization.

FEE IN LIEU. A cash contribution paid by a developer instead of providing facilities required of development under this Ordinance.

FINAL PLAT. See Plat, Final.

FIRE DEPARTMENT. The Marengo Fire Protection District.

FLOOD FRINGE. That portion of the floodplain outside of the regulatory floodway.

FLOODPLAIN. That land adjacent to a body of water with ground surface elevations at or below the base flood or the 100-year frequency flood elevation. (also known as the Special Flood Hazard Area (SFHA)).

FLOODWAY. The channel and that portion of the floodplain adjacent to a stream or water course which is needed to store and convey the anticipated existing and future 100-year frequency flood discharge with no more than a 0.1 foot increase in stage due to any loss of flood conveyance or storage and no more than a 10 percent increase in velocities.

HALF STREET. A street with less than a full pavement width.

HEALTH DEPARTMENT. The McHenry County Department of Health.

HIGHWAY DEPARTMENT. The McHenry County Highway Department.

HIGHWAY ROAD COMMISSIONER. The elected or appointed Highway Commissioner of the Township Road District.

HOMEOWNERS ASSOCIATION. A group of property owners, whether residential or nonresidential, formed to address the ownership and maintenance of facilities owned in common or jointly by persons who own lots in the subdivision.

HYDROGRAPH. A. graph showing a given location on a stream or conduit, the flow-rate with respect to time.

IDNR. The Illinois Department of Natural Resources.

IDOT. The Illinois Department of Transportation.

IEPA. The Illinois Environmental Protection Agency.

INFILTRATION. The passage or movement of water into the soil surfaces.

ISPE. The Illinois Society of Professional Engineers.

LOT. A parcel of land, occupied or intended for occupancy by a use permitted in the Zoning Ordinance, which is designated by subdivision plat, approved by the City of Marengo, and recorded with the County Recorder's Office.

LOT, CORNER. A parcel of land situated at the intersection of two or more streets or adjoining a curved street at the end of a block.

MAJOR DRAINAGE SYSTEM. That portion of a drainage system needed to store and convey flows beyond the capacity of the minor drainage system.

MAYOR. The duly elected or appointed Mayor of the City of Marengo.

MINOR DRAINAGE SYSTEM. That portion of a larger system designed for the convenience of the public. It consists of street gutters, storm sewers, small open channels, and swales.

MITIGATION. The action to correct or prevent an undesirable condition, including, but not limited to compensatory storage, soil erosion and sedimentation control, channel restoration, and wetlands.

MUNICIPAL UTILITY EASEMENT. A right to the use of land for, but not limited to, water, sanitary sewer, storm sewer and stormwater.

NATURAL. Conditions resulting from physical, chemical and biological processes without intervention by man.

NATURAL AREA. An area of land, not necessarily undisturbed, which either retains or has been substantially restored to its original nature or native character.

NATURAL RESOURCE CONSERVATION SERVICE. A division of the United States Department of Agriculture which provides technical assistance in soil-related matters to, individuals, units of government, etc., through the local Natural Resource Conservation Service District office.

NATURAL RESOURCE INVENTORY (NRI) REPORT. A report prepared by the McHenry County Soil and Water Conservation District which describes the soils, as shown on the official McHenry County. Soil Maps, surface geology and other natural features of a parcel of land, and evaluates in general terms its suitability for a particular use.

NET BUILDABLE AREA. The portion of a lot, within which a structure can be built, after required setbacks, yard areas, landscape, and open space areas are met.

NET SITE ACREAGE. The gross acreage minus the acreage devoted to street right-of-way, storm water retention and detention basins, bodies of water, public parks, school sites, municipal sites,

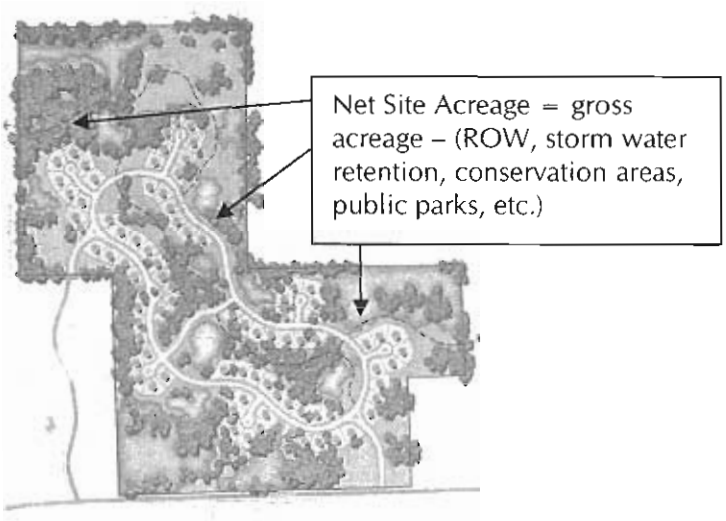

conservation areas, and areas with slopes greater than fifteen percent (15%).

NONCRITICAL SOIL. Undisturbed soil materials, as determined by on-site comprehensive soil survey, that can support a conventional private sewage disposal system, where at least the lower portion of the soil absorption part of the system can be installed in original, uncompacted soils. Another term: having the same meaning for purposes of this Ordinance can be "suitable soil."

100-YEAR EVENT. A rainfall, runoff, or flood event having a one percent, chance of occurring in any given year.

OPEN SPACE. Open space is an area lacking in any man-made structures and surfaces, other than those used for public park and recreational uses.

ORDINANCE. The City of Marengo Subdivision Ordinance.

OWNER. The proprietor of a piece of property (or the beneficiary if title is held in a trust) and his designated representative such as developers, engineers, surveyors and other agents.

PEAK FLOW. The maximum rate of flow of water-at a given point in a channel or conduit.

PLANNING AND ZONING COMMISSION. The Planning and Zoning Commission of the City of Marengo.

PLAT, FINAL. The official graphic depiction of a subdivision which is ultimately filed for the record in the Recorder's Office. It shows all lots, easements, streets and other dedicated areas and also indicates items such as building setback lines, restricted areas for septic systems and any ingress and egress restrictions.

PLAT, PRELIMINARY. A graphic depiction of the proposed lot lines, streets and other engineering improvements of a proposed subdivision superimposed on a map of the existing topography. Where septic systems are to be used for subsurface waste disposal, it will also indicate soil classifications and wetness categories used to determine suitability of various areas for the septic systems (also known as "Tentative Plat").

PLAT ACT. An act to revise the law in relation to plats, approved March 21, 1874, as amended (765 ILCS 20510.01 et seq.).

POLICE DEPARTMENT. The City of Marengo Police Department.

POLITICAL TOWNSHIP. A unit of local government organized under an act to revise the law in relation to township organization, approved March 4, 1874, as amended (60 ILCS 5/1-1 et seq.). It may or may not coincide with a Congressional Survey Township.

POSITIVE DRAINAGE. Provision for overland paths for all areas of a property including depressional areas that may also be drained by storm sewer.

PRELIMINARY PLAT. See Plat, Preliminary.

PROPERTY. A parcel of real estate.

PUBLIC UTILITY EASEMENT. A right to the use of land for, but not limited to telephone, gas, cable, and electric. This is distinguished from a municipal utility easement.

RECORDER. The elected or appointed County Recorder of McHenry County, Illinois.

RECORDER'S ACT. An act to revise the law in relation to Recorders, approved March 9, 1874, as amended (55 ILCS 5/3-5001 et seq.).

REGIONAL SUPERINTENDENT OF SCHOOLS. The elected head of the McHenry County Educational Services Region.

REGISTERED PROFESSIONAL ENGINEER (LICENSED PROFESSIONAL ENGINEER). A person who is licensed to practice Professional Engineering by the State of Illinois, or who, is allowed to practice by the State of Illinois under a reciprocity agreement with another state (see 225 ILCS 655/1).

REGISTERED PROFESSIONAL LAND SURVEYOR (LICENSED PROFESSIONAL LAND SURVEYOR). A person who is licensed to practice professional surveying by the State of Illinois (see 225 ILCS 330 14 [g])

REGULATORY FLOODWAY. The channel, including on-stream lakes, and that portion of the floodplain adjacent to a stream or watercourse as designated by the U. S... Department of Housing and Urban Development (HUD) which is needed to store and convey the existing and anticipated future 100-year frequency flood discharge with no more than a 0.1 foot increase in stage due to the loss of flood conveyance or storage and no more than a 10 percent increase in velocities. The regulatory floodways for selected water bodies, for areas in the City and within its planning jurisdiction, are designated on the Flood Insurance Rate Maps prepared by the Federal Emergency Management Agency (FEMA), panel 170482 0001C, dated January 2, 1992, and parcels 170732 0175B, 170732 0300B, 170732 0150B and 170732 0275B dated September 30, 1981, as amended. To locate the regulatory floodway boundary on any site, topographic elevations should be used where they are recited, otherwise, the regulatory floodway boundary should be scaled off the regulatory floodway map and located on a site plan, using reference marks common to both maps. Where interpretation is needed to determine the exact location of the regulatory floodway boundary, the Illinois Department of Natural Resources, Office of Water Resources should be contacted for the interpretation.

RESUBDIVISION. The further division of lots or the relocation of lot lines of any lot or lots within a subdivision previously made and approved or recorded according to law.

RETENTION BASIN. A facility designed to completely retain a specified amount of stormwater runoff without release except by means of evaporation, infiltration, emergency bypass or pumping.

REVIEWING AUTHORITY. The person or board responsible for approving or recommending the approval of the development under this Ordinance, namely the Development Review Committee, Planning and Zoning Commission or City Council.

SEDIMENTATION. The process that deposits soils, debris, and other materials either on other ground surfaces or in bodies of water or stormwater drainage systems.

SEPTIC SYSTEM (CONVENTIONAL). An individual, conventional on-site sewage system employing a septic tank and the soil treatment system commonly known as seepage trenches, that are partially or wholly in original soil material.

SOIL CLASSIFIER. A certified member of the Illinois Soil Classifiers Association and/or a certified professional soil classifier member of ARCPACS who, by reason of his special knowledge of the physical, chemical and biological sciences applicable to soils, and of the methods and principles of soil classification as acquired by soils education and soil classification experience in the formation, morphology, description and mapping of soils, is qualified to practice soil classifying.

SOIL STANDARDS MANUAL FOR ON-SITE WASTEWATER DISPOSAL SYSTEMS. A book prepared by the McHenry County Department of Health which details requirements for the design and installation of septic systems in various types of soil conditions.

STANDARD SPECIFICATIONS. The Standard Specifications for Road and Bridge Construction adopted July 1, 1994 by the Illinois Department of Transportation (IDOT), as amended.

STATE PLANE COORDINATES. The Illinois Coordinate System Act, 765 ILCS 225/1 et. seq.

STATE'S ATTORNEY. The elected or appointed State's Attorney of McHenry County, Illinois.

STORM SEWER. A closed conduit for conveying collected, stormwater.

STORMWATER DRAINAGE SYSTEM. All means, natural or man-made, used for conducting stormwater to, through or from a drainage area to the point of final outlet from a Property. The stormwater drainage system includes, but is not limited to, any of the following: conduits and appurtenance features, canals, channels, ditches, streams, culverts, streets, storm sewers, detention basins, swales and pumping stations.

STORMWATER RUNOFF. The waters derived from melting snow or rain falling within a tributary drainage basin which are in excess of the infiltration capacity of the soils of that basin, which flow over the surface of the ground, or are collected in channels or conduits.

STREET. The term "street" and "road" are used interchangeably and mean the same. Classifications are set out in Section 303.

STREET FRONTAGE. The side of a lot abutting a public or dedicated street right-of-way to which it proposes to have direct ingress and egress.

SUBDIVISION. A division of land into two or more parts for the purpose, whether immediate or future, of transfer of ownership or building development including all public streets, alleys, ways for public service facilities, parks, playgrounds, school grounds, or other public grounds, and all the tracts, parcels, or blocks, and numbering of such lots, blocks, or parcels by progressive numbers giving their precise dimensions.

The following shall <u>not</u> be considered a subdivision and shall <u>be exempt</u> from the requirements of this code:

A. The sale or exchange of parcels of land between: owners of adjoining and contiguous land;

B. The conveyance of parcels of land or interests therein for use as a right-of-way for railroads or other public utility facilities and other pipe lines which does not involve any new streets or easements of access;

C. The conveyance of land owned by a railroad or other public utility which does not involve any new streets or easements of access;

D. The conveyance of land for highway or other public purposes or grants or conveyances relating to the dedication of land for public use or instruments relating to the vacation of land impressed with a public use; and

E. Conveyances made to correct descriptions in prior conveyances.

F. Conveyance of a two-family dwelling resulting in title to each dwelling unit being held by different owners where the document of conveyance includes a condition precedent that the conveyance is subject to an agreement between the parties setting forth the relative rights and obligations of the parties, and that said agreement be recorded and otherwise be in a form acceptable to the City subject to the following limitations:

i. That the two-family lot be at least 74 feet in width.

ii. That the two-family unit is a "side by side" unit with a single common wall and no common floors or ceilings.

iii. That the lot be zoned R-2 at the time of said division.

iv. That the two units of the dwelling be essentially of an equal size.

v. That the agreement setting forth the relative rights and obligations of the parties meet the following criteria:

a. That the agreement be approved as to form by the City prior to its recording.

b. That the agreement provide that all exterior surface areas of the building shall be of a like architectural design, color and construction.

c. That the agreement provide that in the event of a dispute between the owners as to any matter, that the Circuit Court of McHenry County shall have the authority to resolve any such disputes.

d. That the agreement provide that no common surface shall be repaired, altered, constructed or removed without the written consent of both owners.

e. That the agreement provide that the City has the right, but not the obligation, to enforce the provisions of the agreement.

SUITABLE SOIL. Undisturbed soil materials as determined by an on-site comprehensive soil survey that can support a conventional private sewage disposal system, where at least the lower portion of the soil absorption part of the system can be installed in original, uncompacted soils. Another term having the same meaning for purposes of this Ordinance can be "Noncritical Soil."

SUPERINTENDENT OF SCHOOLS. The current Superintendent of Schools for the applicable school district.

SUPERINTENDENT OF WATER/SEWER. The person approved by the City Council as the department head of the Water and Sewer Department.

TIME OF CONCENTRATION. The elapsed time period for stormwater to flow from the most hydraulically remote point in a drainage basin to a particular point of interest in that watershed.

TRIBUTARY WATERSHED. All of the land surface area that contributes runoff to a given point.

2-YEAR EVENT. A runoff, rainfall, or flood event having a 50 percent chance of occurring in any given year.

UTILITY COMPANY. A person, firm or corporation who owns, controls, operates or manages any equipment, plant or property furnishing telephone, cable television, electric, light, heat, power, water, sewerage, gas (by pipeline) or similar service for public use.

WET BASIN. A detention basin designed to maintain a permanent pool of water after the temporary storage of stormwater runoff.

YARD. An open space on the same zoning lot with a principal building or group of buildings.

YARD, FRONT. An area reaching across the full width of the lot, extending from the front line of the main building to the lot line.

YARD, REAR. An area extending the full width of the lot between the rear line of a main building and the rear lot line.

YARD, SIDE. That part of the yard lying between the nearest line of the principal building and a side lot line, and extending from the front yard to the rear yard.

ZONING ENFORCEMENT OFFICER. Any person authorized under the City of Marengo Zoning Ordinance to undertake enforcement of that Ordinance.

ZONING ORDINANCE. The City of Marengo Zoning Ordinance.

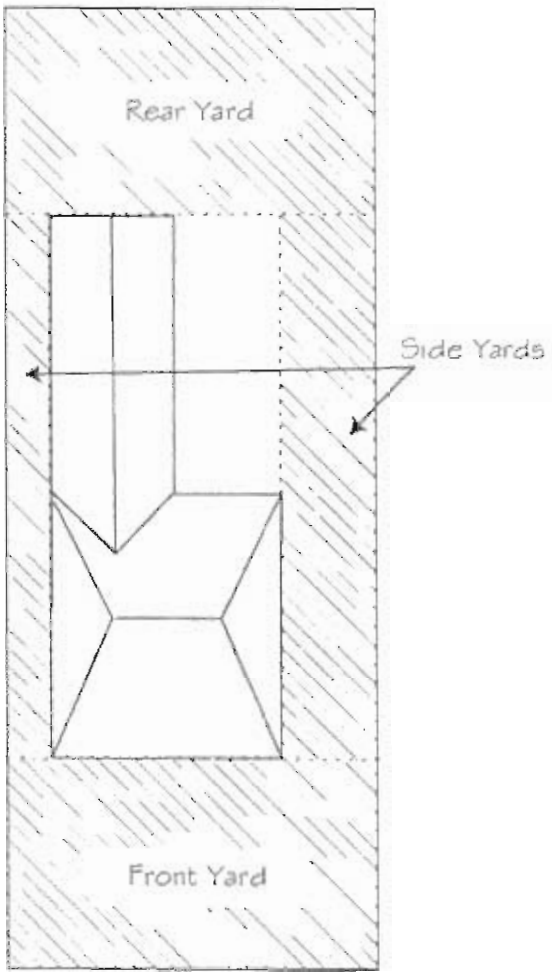

Appendix A
ENGINEERING PLANS

A-1 General

All street and utility plans submitted in conjunction with a Final Plat shall include Engineering Drawings consistent with this Appendix.

A-2 Signature and Seal of Engineer Required

All street land utility plans shall be certified by a registered professional engineer and bear his signature, seal, and date of license expiration.

A-3 Minimum Data Required

Street plans must be complete in all respects and must include at least the following minimum data:

- Specifications (IDOT Standard Specifications and ISPE Standard Specifications) for Water and Sewer.
- Plan and profile (to suitable scale) of all roads to be improved.
- Cross-sections (to suitable scale) at 100 foot (minimum).
- Size, length, material type and invert elevation of all drainage structures. (Calculations must be furnished to justify all structures 24 inches and larger.)
- Plan and profile (to suitable scale), cross-sections (if appropriate) and typical section of all off-site drainage within 300 feet and all on-site drainage in drainage easements.
- Typical road section or sections as appropriate.
- Details of all structures and special construction of any nature. Typical or specific details at road intersections, cul-de-sacs, "t" turn-arounds, etc.
- Street construction and maintenance easements, drainage easements and lot lines.
- All plans to the same topographic datum as the Preliminary Plat, and two permanent benchmarks.
- Street lighting as required by Subsection 301.7 and 302.6.
- Sidewalks as required by Subsection 301.6 and/or302.7.
- Plan and profile of any water and sanitary sewer lines.
- Plan showing existing and proposed contours and storm sewer outfall structures related to detention and retention basins.
- Erosion control plans.

A-4 Cost Estimate

A complete and detailed estimate of cost, prepared and signed by a registered professional engineer, must accompany the plans.

A-5 Certificate of Insurance

A certificate of insurance shall be filed with the City.

A-6 Preconstruction Requirements

A preconstruction conference with the representatives of the developer and the City -will be required before the contractor proceeds with construction. The contractor will notify the City Engineer and the City of Marengo 48-hours in advance of any work being started.

A-7 Best Engineering Practice and Compliance with Ordinance Required

Review and approval of street and utility plans does not relieve the design engineer of the responsibility for an adequate design in accordance with best management practices and meeting the requirements of this Ordinance.

Appendix B

Land Development Exhibits

B-1 Table of Estimated Ultimate Population Per Dwelling Unit

Table of Estimated Ultimate Population Per Dwelling Unit

	Pre-School 0-4 Years	Elementary Grades K-5 5-10 Years	Junior High Grades 6-8 11-13 Years	Total Grades K-8 5-13 Years	High School Grades 9-12 14-17 Years	Adults 18+ Years	Total Per Dwelling Unit
Detached Single Family							
2 Bedroom	0.113	0.136	0.048	0.184	0.020	1.700	2.017
3 Bedroom	0.292	0.369	0.173	0.542	0.184	1.881	2.899
4 Bedroom	0.418	0.530	0.298	0.828	0.360	2.158	3.764
5 Bedroom	0.283	0.345	0.248	0.593	0.300	2.594	3.770
Attached Single Family							
1 Bedroom	0.000	0.000	0.000	0.000	0.000	1.193	1.193
2 Bedroom	0.064	0.088	0.048	0.136	0.038	1.752	1.990
3 Bedroom	0.212	0.234	0.058	0.292	0.059	1.829	2.392
4 Bedroom	0.323	0.322	0.154	0.476	0.173	2.173	3.145
Apartments							
Efficiency	0.000	0.000	0.000	0.000	0.000	1.294	1.294
1 Bedroom	0.000	0.002	0.001	0.003	0.001	1.754	1.758
2 Bedroom	0.047	0.086	0.042	0.128	0.046	1.693	1.914
3 Bedroom	0.052	0.234	0.123	0.357	0.118	2.526	3.053

Source: Illinois School Consulting Service/Associated Municipal Consultants, Inc. Naperville, IL 1996.

B-2 AGREEMENT REGARDING THE RECEIPT OF DEVELOPER SUBDIVISION CONTRIBUTIONS

AGREEMENT REGARDING THE RECEIPT OF DEVELOPER SUBDIVISION CONTRIBUTIONS

WHEREAS, the City of Marengo, Illinois, on behalf of itself, its officers, employees and independent contractors (the "City"), through its ordinances or through the provisions of its annexation agreements has required that developers make contributions to the City, that the City, in turn, may make available for other government bodies that are affected by the subdivision improvements; and

WHEREAS, such contributions may be in land or in money and, when transferred or paid over to those government bodies, inure to the benefit of those government bodies and not entirely to the direct benefit of the City; and

WHEREAS, from time to time within the City, and within other municipalities, disputes have arisen regarding the validity and amount of such contributions; and

WHEREAS, the City is willing, at its discretion, to continue seeking the contribution of land or money but wishes to procure a commitment from other government bodies benefited by the receipt of such contributions that those government bodies will: (a) acknowledge that the requirement that such subdivision contributions be made are totally within the discretion of the City as to their existence, manner and amount; (b) pay the cost of defending any lawsuit that is filed challenging the appropriate amount of the contributions, the time at which they are to be made or any other aspect of the contributions; and (c) comply with the terms of a final and nonappealable judicial determination by a court of competent jurisdiction rendered in connection with the lawsuit; and

WHEREAS, the City is willing, in its discretion, to pay over or require contributions only to other government bodies that execute this Agreement annually;

NOW, THEREFORE, in consideration for the payment of money or the transfer of the land to the Benefiting Government, which the City from time to time may within its discretion cause to be made by developers that are subdividing property, ***IT IS AGREED*** between the City on behalf of itself and its officers, employees, and independent contractors, and _____, a government body within the State of Illinois (the "Benefiting Government"), as follows:

1. The Benefiting Government acknowledges that, except as otherwise provided in the City's ordinances and/or annexation agreements, the City is not obligated to cause the payment of money or the transfer of land to the Benefiting Government. The Benefiting Government recognizes that the City may, at its sole discretion, amend its ordinances or annexation agreements or its practices to discontinue the payment of contributions to the Benefiting Government.

2.

A. In the event a lawsuit is filed against the City, the Benefiting Government, and/or others by a developer that is subdividing property or any other person, corporation or entity that challenges the appropriateness, amount, timing or any other aspect of a contribution that, pursuant to the terms of the City's ordinances or annexation agreements, has been paid or is due to the Benefiting Government, then the Benefiting Government does agree to pay the costs and litigation expenses (including reasonable attorneys' fees) incurred in defending such lawsuit. The costs and expenses shall be paid by the Benefiting Government when and as incurred by the City but in no event more than once a month. As a condition precedent to the payment of these costs and expenses, the City shall submit to the Benefiting Government copies of the original statements reflecting the costs and expenses, together with the non-privileged supporting documentation that may be reasonably requested by the Benefiting Government.

B. The City covenants and agrees that upon consulting with the benefiting government, it shall employ competent and skilled legal counsel to represent the Benefiting Government and the City, and further covenants and agrees that it shall keep the Benefiting Government fully advised as to the progress and status of the litigation. In particular, the City shall provide to the Benefiting Government copies of all pleadings filed in the litigation and shall consult regularly (and shall cause its attorneys to consult regularly) with the Benefiting Government or its attorneys, as applicable, as to the strategy for defending the lawsuit. In no event may such litigation be compromised or settled by the City without at least 30 days' prior written notice to the Benefiting Government.

C. In the event that the Benefiting Government decides that it would prefer to be represented in the litigation by legal counsel of its own choosing, then the Benefiting Government shall be free to retain its own legal counsel for that purpose, to intervene in the litigation and to ask the City to terminate its representation of the Benefiting Government under Section 2 of this Agreement. The Benefiting Government shall notify the City, in writing, to that effect. In that event, this Agreement shall remain in full force and effect regarding all other provisions of this Agreement, and the Benefiting Government shall remain liable to the City for all sums that have accrued under this Agreement up until the date that such written notice is received and for all sums that remain due and owing from the Benefiting Government to the City relating to the defense of any lawsuit under the terms of this Agreement.

3. The Benefiting Government shall further indemnify and hold harmless the City from any and all liability arising from Article 10 of the City's Subdivision Ordinance including but not limited to the general administration and handling of funds required by the City and/or the Benefiting Government.

4. In the event that a final and non-appealable judicial determination is made by a court of competent jurisdiction that contributions of land or money received by the Benefiting Government are, in whole or in part, excessive, the Benefiting Government shall promptly repay those contributions to the person who procures such a judgment, together with all other amounts judged by the court to be owing from the Benefiting Government. In the event that a judicial determination should require the payment of damages or payment of the attorneys' fees of the plaintiff's attorneys, the Benefiting Government shall pay all additional amounts.

5. In further consideration of the continued payment by the City to the Benefiting Government of the subject contributions of land or money, the Benefiting Government agrees that its obligations under this Agreement shall extend to both past and future cash and land contributions.

6. On or before September 1st of each year, every Benefiting Government that receives payments from the City under this Agreement shall submit a report to the City describing the manner in which the payments have been used and provide any additional information the City may require. When the money turned over to Benefiting Government is to be used for a specific purpose or within a specific time period, the report shall address those issues. If the Benefiting Government should fail to file such a report with the City, the City may delay the payment of any additional funds due the Benefiting Government until such time as a full report containing adequate information is transmitted to the City. The Benefiting Government understands that it will be asked to execute an indemnity agreement similar to this Agreement on an annual basis and that the City shall not pay any additional funds due to the Benefiting Government until such time as the City is in receipt of such annually executed indemnity agreement.

7. This Agreement shall be terminable by either party for any reason or no reason at all upon 30 days' prior written notice to the other party evidencing the intention to so terminate this Agreement. But the termination of this Agreement shall not affect the continuing obligation of the Benefiting Government or the City with regard to claims or damages allegedly arising out of the City's efforts prior to termination to impose, collect or distribute contributions, or to the actual distribution of subdivision contributions.

DATED this ___ day of _____, ____.

City of_____	Benefiting Government:
_____	_____
Mayor	Title:_____
(SEAL)	(SEAL)
ATTEST:	ATTEST:
_____	_____
City Clerk	Secretary

B-3 Agreement Between Owner and Municipality to Delay Payment of Cash Contributions

AGREEMENT BETWEEN OWNER AND MUNICIPALITY TO DELAY PAYMENT OF CASH CONTRIBUTIONS

The City of Marengo (the "City") and _____, ("Owner") agree as follows. For purposes of this Agreement, "Owner" is defined as the individual, firm, association, syndicate, co-partnership, corporation, trust, or any other legal entity having a proprietary interest of record in the subject property, except that in the case of a trust the Owner shall be deemed to include the beneficiary or beneficiaries and the trustee thereof. The term "Owner" also includes the Owner's authorized agent or any person authorized by such owner to apply for City approval in connection with a final plat of subdivision, building permit, or other improvement or development upon real property.

1. The City has approved a final plat of subdivision or a final plat of a planned development at the request of Owner for the real estate legally described in Exhibit 1 attached hereto and made a part hereof (the "Land"). Accordingly, pursuant to the City's Subdivision Ordinance, certain cash contributions in lieu of dedications for library, fire/rescue, park and recreation, and school lands are immediately due the benefiting district from the Owner.

2. Owner has, however, requested that the payment of the aforesaid cash contributions be delayed and that the same become due and payable on a per dwelling unit basis at the time the City issues a building permit for the particular dwelling unit.

3. In consideration for the City agreeing to delay the required payment to the benefiting district of the cash contributions in accordance with Paragraph 2 above, Owner hereby agrees as follows:

   (a) The amount of cash contributions owed shall be calculated based upon Ordinance No. _____ or as provided for in such other future ordinance amending or replacing Ordinance No. _____ which is in effect at the time of the issuance of a building permit; and

   (b) Notwithstanding any present or future law, regulation and/or legal precedent to the contrary, the unit of local government or benefiting district that is the ultimate recipient of the subject cash contributions may expend such contributions for any of the following purposes intended to serve immediate or future needs of the residents and children of the Owner's subdivision or planned development: (1) for the acquisition of land; (2) for site improvements such as, by way of example, streets, curbs, gutters, stormwater control, and utility extensions; (3) for construction of capital facilities, including, by way of example, new buildings and structures, and the expansion or enhancement of existing buildings and structures; (4) for the acquisition of capital equipment which would qualify as a depreciable property under Internal Revenue Service regulations; and (5) for so-called soft costs directly related to the foregoing items (2) or (3) such as architectural and engineering costs.

4. Owner has reviewed all provisions of Article 10 of the City's Subdivision Ordinance regarding the dedication of land or sites or cash contributions in lieu thereof, as well as all of the methodology, formulae, calculations, projections, assumptions, numbers and other

factors used to arrive at the land dedication requirements or cash contributions in lieu thereof that are the subject of the this Agreement (hereinafter referred to as the "Ordinance and Attendant Calculations") and hereby acknowledges and agrees that:

(a) Pursuant to the terms of the Ordinance, Owner has been offered the opportunity to raise in a hearing before the City, any objections relating to acreage requirements, presumptions as to fair market value, the Density Formula, or any other application of the Ordinance; Owner has not raised such objections; Owner has thereby waived the right to assert those objections;

(b) Owner hereby waives any future right to object to or to institute any legal action regarding Ordinance and Attendant Calculations.

(c) Owner hereby acknowledges that Ordinance and Attendant Calculations have been properly passed, calculated and imposed.

5. This Agreement constitutes a covenant that is appurtenant to and runs with the Land. Either this Agreement or a memorandum thereof may be recorded against legal title to the Land by either party hereto; provided, however, it shall be a condition of the City's issuance of the first building permit for a dwelling unit on the Land that Owner shall provide satisfactory evidence to the City that this Agreement or a memorandum thereof has been recorded against legal title to the Land.

6. Owner represents and warrants to the City that it is the sole holder of record fee title to the Land.

IN WITNESS WHEREOF, the City and the Owner have caused this Agreement to be duly authorized, executed and entered into as of the ___ day of _____, _____.

_____	_____
Dennis Hammortree Mayor	Owner
	ATTEST:
_____	_____
Barbara Bigalke City Clerk	

[ATTACH EXHIBIT B-2, LEGAL DESCRIPTION OF REAL ESTATE]

B-4 Acknowledgement of Notification Rights

Acknowledgement of Notification Rights

Developer hereby acknowledges receipt of a copy of Article 10 of the City of Marengo Subdivision Ordinance, that describes, in Section 1009, the developer's right to object to the imposition of dedication requirements or cash in lieu of land requirements.

Developer further acknowledges that if it has any objection to such imposition, that it must follow the procedure set forth in said Section 1009. Failure to do so by the developer shall constitute a waiver of the developer's right to object to such imposition. Payment of the fees or transfer of land pursuant to Article 10 shall constitute a waiver of any right to such a hearing.

Signed: _____

Date: _____

Witness: _____

Date: _____

Appendix C

ENDANGERED SPECIES CONSULATION ACTION REPORT

Date Submitted: _____

(Office Use Only)
Project Code
Date Due

Agency Name: _____
Contact Person: _____
Phone: _____
Agency Address: _____

DESCRIBE PRECISE LOCATION OF PROPOSED ACTION:
County(ies): _____
City/Town: _____
Township/Range/Section: _____
U.S.G.S Quad Map Name (s): _____
Brief Description of the proposed action:

Please enclose a map delineating the location of the proposed action.
****
****

For Natural Heritage Use Only

QUADCODE(S): _____ _____ _____ _____
Are there any threatened/endangered species or natural areas located within the vicinity of the project? (Yes) (No) If yes, the consultation process should continue. If no, the consultation process is terminated.

Evaluation approved by:

_____ _____
Endangered & Threatened Species Program Manager — Date

Submit to: Natural Heritage Division, Ill. Department of Conservation
524 S Second Street, Room 485
Springfield, IL 62701-1787

Appendix D

SECURITY REQUIREMENTS

D-1 General

The following form is acceptable for meeting the guarantees required by this Ordinance.

D-2 Letter of Credit

IRREVOCABLE LETTER OF CREDIT

Date: _____

Irrevocable Letter of Credit No.: _____

Beneficiary
City of Marengo
132 East Prairie Street
Marengo, IL 60152
Attention: City Clerk

Applicant
(Party Requesting Letter of Credit)
Address

Amount
USD $ (Amount)

Expiration Date _____

The undersigned, (Bank) _____, of _____ (City/State) _____, hereby issues to the City of Marengo, Illinois 60152 (the "City"), this irrevocable Letter of Credit in the initial amount of $_____, which amount is subject to reduction in accordance with the provisions herof, and which the amount, as in effect on the date herof or as so reduced herafter, is herinafter referred to as the "Stated Amount." The undersigned represents and warrants that the undersigned has full power and authority to issue this Letter of Credit, and that all conditions precedent to the issuance of the Letter of Credit have been satisfied.

1. **Draws.** Credit may be drawn by the City by means of presentation to the undersigned of the City's sight draft substantially in the form of Annex 1.

   Draws on said Letter of Credit must also be accompanied by the certificate of the City substantially in the form of Annex 2 certifying either: (1) that said Letter of Credit is about to expire and has not been renewed; or (2) that work has not been completed in accordance with the plans, specifications and agreements (including any amendments thereof) for the following project (the "Project"):

   (Description of Project)

   Draws in an amount less than the Stated Amount are permitted. There is no limit on the number of draws the City may take under this Letter of Credit.

2. **Reduction of Stated Amount.** The Stated Amount may be reduced upon presentation by the City of this Letter of Credit and of a certificate substantially in the form of Annex 3. Such-certificate shall be appropriately completed, and shall be delivered to the undersigned at the address above along with the original Letter of Credit. Upon receipt of the certificate and the Letter of Credit, the undersigned shall immediately note the reduced amount on the face of the Letter of Credit, or cancel this Letter of Credit and simultaneously reissue a Letter of Credit-identical to this Letter of Credit for the reduced Stated Amount.

3. **Amendment of Project Description.** The Project may be amended upon presentation by the City of this Letter of Credit and of a certificate substantially in the form of Annex 4. Such certificate shall be appropriately completed, and shall be delivered to the undersigned at the address above along with the original Letter of Credit. Upon receipt of the certificate and the Letter of Credit, the undersigned shall immediately note the amendment to the Project description on the face of this Letter of Credit or cancel this Letter of Credit and simultaneously reissue a Letter of Credit identical to this Letter of Credit with the amended Project description.

4. **Expiration.** This irrevocable Letter of Credit shall expire on (Date/Year); provided, however, the undersigned shall notify the City, by certified mail, return receipt requested, at least 35 days prior to said expiration date, that said Letter of Credit is about to expire. In no event shall this irrevocable Letter of Credit or the obligations contained herein expire except upon said prior written notice, it being expressly agreed by the undersigned that the above: expiration date shall be and shall be required to comply with this notice provision. Notice, shall be made to the City of Marengo, 132 East Prairie Street, Marengo, IL 60152, Attention: City Clerk. The undersigned further agrees that this irrevocable Letter of Credit shall remain in full force and effect and pertain to any and all amendments or modifications which may be made from time to time to the plans, specifications and agreements for the project, with or without notice from the City of such amendments or modifications.

5. **Payment.** (Name of Bank) hereby undertakes and engages that all demands made in conformity with this irrevocable Letter of Credit will be duly honored and payment shall be made in immediately available funds upon presentation. If, within 10 days of the

date any demand (made in conformity with this irrevocable Letter of Credit) is presented, the undersigned fails to honor same, the undersigned agrees to pay all attorney's fees, Court costs and other expenses incurred by the City in enforcing the terms of this Letter of Credit.

6. **Governing Law.** This Letter of Credit, and each provision hereof, shall be governed by and construed in accordance with the Uniform Customs and Practice for Documentary Credits (1983 Revision), International Chamber of Commerce, Publication No. 400 (the "Uniform Customs"). This Letter of Credit shall be deemed a contract made under the laws of the State of Illinois and shall; as to matters not governed by the Uniform Customs, be governed by and construed in accordance with such laws. The undersigned agrees that venue for any actions brought with respect to this Letter of Credit shall be in the 19th Judicial Circuit, McHenry County, Illinois.

(Name of Bank)

By: _____ Attest: _____
Title: _____ Title: _____

Annex I
Form of Sight Draft

$_____ _____, 19____

At Sight of this Draft

Pay to the order of City of Marengo, Illinois, as beneficiary under the Irrevocable Letter of Credit referred to below, $_____ Dollars for value received.

Drawn under (Bank)_____, Irrevocable Letter of Credit No. _____.

To: (Bank)
(Address)

Attention: _____

_____
City of Marengo, Illinois

By: _____

Annex 2
Form of Certificate for Drawing

The undersigned, the Clerk of the City of Marengo (the "City"), with full authority to bind the City, as beneficiary (the "Beneficiary" under the Letter of Credit referred to below, herby certifies, with reference to its Irrevocable Letter of Credit No, _____ issued by _____(Bank)_____ (the "Bank", in favor of the Beneficiary (the "Letter of Credit"), that

1. the Letter of Credit is about to expire and has not been renewed;

   (or, in the alternative)

2. work has not been completed in accordance with the plans, specifications, and agreements (including any amendments thereof) for the following project:

   (Description of Project)

INWITNESS WHEROF, the Beneficiary has executed and delivered this certificate as of the ___ day of (month _____), 19 (year).

City of Marengo, Illinois

By: _____
Title: City Clerk

Annex 3
Form of Certificate for Reduction of Stated Amount

The undersigned, the Clerk of the City of Marengo (the "City"), with full authority to bind the City, as beneficiary (the "Beneficiary" under the Letter of Credit referred to below, herby certifies, with reference to its Irrevocable Letter of Credit No, _____ issued by _____(Bank)_____ (the "Bank"), in favor of the Beneficiary (the "Letter of Credit"), that

1. Pursuant to the Agreement entered into by and between City and _____ (the "Company"), dated ____(month)____, 19 (year), the amount available to be drawn under the Letter of Credit (the "Stated Amount"), is reduced by $_____, and effectiveyou're your receipt herof, the Stated Amount shall be reduced to $_____, and such amount shall thereafter constitute the entire Stated Amount of the Letter of Credit.

2. The undersigned herby certifies (1) that he or she is authorized to sign this Certificate relating to the Letter of Credit on behalf of the Beneficiary, and the (ii) that the Beneficiary has, with the written consent of the Company, reduced the Stated Amount of the Letter of Credit.

   Capitalized terms used herein and not otherwise defined in the Letter of Credit.

   IN WITNESS WHEREOF, the Beneficiary has executed and delivered this certificate as of the ____ day of (month)_____, 20(year)___.

City of Marengo, Illinois

By: _____
Title: City Clerk

Annex 4

Form of Certificate for Amendment of Project Description

The undersigned, the Clerk of the City of Marengo (the "City"), with full authority to bind the City, as beneficiary (the "Beneficiary" under the Letter of Credit referred to below, herby certifies, with reference to its Irrevocable Letter of Credit No, _____ issued by _____(Bank)_____ (the "Bank"), in favor of the Beneficiary (the "Letter of Credit"), that

1. Pursuant to the Agreement entered into by and between City and _____ (the "Company"), dated ____(month)____, 19 (year), the description of the project as contained in paragraph 1 of the Letter of Credit shall be amended upon the undersigned's receipt of this certificate and the original Letter of Credit. After giving effect to the amendment, the description of the Project shall be as follows:

   and such Project description shall constitute the Project description for the Letter of Credit unless further amended.

   Capitalized terms used herein and not otherwise defined in the Letter of Credit.

IN WITNESS WHEREOF, the Beneficiary has executed and delivered this certificate as of the ____ day of (month)_____, 20(year)___.

City of Marengo, Illinois

By: _____
Title: City Clerk

Appendix E

Retained Personnel Fees

Retained Personnel Fees Form Agreement

The following form of agreement is approved for purposes of meeting the requirements of this Appendix.

CITY OF MARENGO
REIMBURSEMENT OF FEES AGREEMENT

City of Marengo Account No._____

Owner:

Name of Property Owner: _____

Owner's Address: _____

_____

Telephone Number: _____Days_____Evenings

PETITIONER:

Name of Petitioner: _____

Petitioner's Address: _____

_____

Telephone Number: _____Days_____Evenings

LOCATION OF PROPERTY:

General Location: _____

_____

Total Acreage: _____PIN: _____

Legal Description (attach as Exhibit A)

E-1 DEPOSIT

In the event that it-is necessary for the City to obtain professional services, including, but not limited to, attorneys, engineers, planners, architects, surveyors, traffic or drainage experts, or other consultants, in connection with any Petitioner's request for the City to consider or otherwise take action upon any annexation, zoning change, subdivision development, other improvement or development upon real property, then the Petitioner and Owner of the property shall be jointly and severally liable for the payment of such professional fees plus 5 percent to

cover the City's administrative expenses. At the time the Petitioner requests action from the City he will be required to deposit a sum, in accordance with Article 9 of the Marengo Subdivision Ordinance, with the City as an initial deposit to be credited against fees and costs incurred for the above described services.

E-2 INVOICES

The City shall send a petitioner regular invoices for the fees and costs and the petitioner shall reimburse the City within 30 days of said invoice. At all times the petitioner shall maintain a balance equal to his initial deposit with the City.

E-3 WITHDRAWAL OF PETITION

A petitioner who withdraws a petition for annexation, zoning change, subdivision development, other implement, or development upon real property, to the City may apply in writing to the City Clerk for a refund of his initial deposit. The City Council may, in its discretion, approve the refund application less any actual fees and costs which the City has already incurred relative to the petition for annexation.

E-4 PROFESSIONAL FEE

Any professional fees incurred as a direct or indirect result of the petitioner, owner or their agent requesting a professional opinion or otherwise requesting relief or assistance from the, City, whether or not related to real property, shall be reimbursed in accordance with this Ordinance if, in the discretion of the City, a professional opinion is desired.

E-5 DEFAULT

Upon the failure of the owner or petitioner to reimburse the City in accordance with this Subsection, no action on any request made by the owner or petitioner will be undertaken by the City Council, or by any other official, quasi-official or deliberative individual or body, and such request shall remain in abeyance until all outstanding fees are paid in full. Upon any failure to reimburse the City in accordance with this Ordinance, the City may, in its discretion, elect to place a lien against any real property associated with the petitioner's request. Interest in the amount of 1 1/2 percent per month shall accrue on all sums outstanding for 30 days or more. Such lien shall be in an amount equal to the outstanding amount owed to the City.

E-6 ASSIGING AUTHORITY

The Mayor and City Council and the designated City staff members are hereby authorized to assign requests for professional services to the City staff or to consultants as the Mayor deems appropriate.

E-7 IN HOUSE STAFF

When any professional services required by the Ordinance are rendered by the City staff, then in such case the party making the request shall reimburse the City for its cost incurred in providing said professional services. Said reimbursement shall be at the rate of $30.00 per hour.

E-8 REMEDIES

The remedies available to the City as set forth herein are non-exclusive and nothing herein shall be construed to limit or waive the City's right to proceed against any or all parties in a court of law of competent jurisdiction.

E-9 AGREEMENT

At the time the petitioner requests action from the City, he will be required to enter into an agreement, which is the Retained Personnel Fees Form Agreement of Appendix E of this Ordinance.

E-10 REFUND

Any surplus funds in the account of the petitioner or owner shall be returned three months after approval by the City Attorney and City Engineer, upon written request by the petitioner or Owner.

By signing this Agreement the petitioner and/or owner acknowledge that each of them has read the foregoing paragraphs and each of them fully understands and agrees to comply with the terms set forth herein. Further, by signing below, each signatory warrants that he/she/it possesses full authority to so sign. The owner and/or petitioner agree that owner and petitioner shall be jointly and severally liable for payment of fees referred to in applicable sections of the ordinances of the City of Marengo, and as referred to hereinabove.

City of Marengo

_____	By: _____
Petitioner	City Administrator
_____	ATTEST:
Owner	
_____	
Date: _____	_____
	City Clerk

Appendix F

F-1 Recommended Street Trees

CITY OF MARENGO
Recommended Landscape Planting Lists
prepared by Teska Associates, Inc.

PARKWAY PLANTINGS

RECOMMENDED STREET TREES FOR PARKWAY PLANTINGS

for use where overhead wires do not exist
minimum mature height of 30 feet or more

Botanical Name	***Common Name***
Acer x freemanii	Freeman Maple
Acer platanoides cultivars	Norway Maple
Acer rubrum 'Red Sunset'	Red Sunset Red Maple
Acer saccharum	Sugar Maple
Acer saccharum 'Green Mountain'	Green Mountain Sugar Maple
Acer saccharum 'Wright Brothers'	Wright Brothers Sugar Maple
Acer saccharum	Sugar Maple
Aesculus hippocastanum	Common Horsechestnut
Carya ovata	Shagbark Hickory
Celtis occidentalis	Common Hackberry
Celtis occidentalis 'Prairie Pride'	Prairie Pride Hackberry
Corylus colurna	Turkish Filbert
Ginkgo biloba (male only)	Ginkgo
Ginkgo biloba 'Autumn Gold'	Autumn Gold Ginkgo
Ginkgo biloba 'Fairmount'	Fairmount Ginkgo
Ginkgo biloba 'Lakeview'	Lakeview Ginkgo
Ginkgo biloba 'Princeton Sentry'	Princeton Sentry Ginkgo
Gleditsia triancanthos inermis 'Greenglory'	Greenglory Honeylocust
Gleditsia triancanthos inermis 'Halka'	Halka Honeylocust
Gleditsia triancanthos inermis 'Shademaster'	Shademaster Honeylocust
Gleditsia triancanthos inermis 'Skyline'	Skyline Honeylocust
Gymnocladus dioica	Kentucky Coffeetree
Juglans nigra	Black Walnut
Liquidambar styraciflua	Sweetgum
Liriodendron tulipifera	Tulip Tree, Yellow Poplar
Ostyra virginiana	Ironwood
Phellodendron amurense	Amur Corktree
Quercus alba	White Oak
Quercus bicolor	Swamp White Oak
Quercus imbricaria	Shingle Oak
Quercus macrocarpa	Bur Oak
Quercus muehlenbergii	Chinquapin Oak

Quercus robur	English Oak
Quercus rubrum	Red Oak
Tilia americana	American Linden
Tilia americana 'Fastigiata'	Pyramidal American Linden
Tilia americana 'Redmond'	Redmond American Linden
Tilia cordata 'Chancellor'	Chancellor Linden
Tilia cordata 'Glenleven'	Glenleven Linden
Tilia cordata 'Olympic'	Olympic Linden
Tilia x euchlora	Redmond Linden
Tilia cordata 'Greenspire'	Greenspire Littleleaf Linden
Ulmus carpinifolia 'Accolade'	Accolade Smoothleaf Elm
Ulmus carpinifolia 'Homestead'	Homestead Smoothleaf Elm
Ulmus carpinifolia 'Regal'	Regal Smoothleaf Elm
Zelkova serrata	Zelkova
Zelkova serrata 'Greenvase'	Greenvase Zelkova

RECOMMENDED STREET TREES FOR PARKWAY PLANTINGS

for use where overhead wires exist
15-30 feet maximum mature height

Botanical Name	***Common Name***
Acer Ginnala	Amur Maple
Amelanchier canadensis	Serviceberry
Carpinus carolinia	Ironwood (American Hornbeam)
Cercis candensis	Redbud
Cornus mas	Corneliancherry Dogwood
Cornusmas alternifolia	Pagoda Dogwood
Crataegus phaenopyrum	Washington Hawthorn
Crataegus crus-galli	Cockspur Hawthorn
Hammamelis virginiana	Witch Hazel
Malus sp.	Flowering Crab Sp.
Ostrya virginiana	Ironwood
Syringa reticulati clutivar	Japanese Tree lilac "Ivory Silk"
Viburnum lentago	Nannyberry
Viburnum prunifolium	Blackhaw Viburnum

F-2 Street Trees Not Recommended

The following tree forms are unacceptable for parkway plantings:

Espalier or topiary: geometrical plant forms achieved thorugh pruning which are contrary to natural form
Dwarf or small scale: trees which grow taller than 3'-0" but cannot be undertrimmed to a minimum height of 7'-0"
Topped or dehorned: trees with most of the crown removed, such that the main branches end abruptly in stubs

The following tree species and varieties are unacceptable;

conifers or needle evergreens are unacceptable
trees with thorns are unacceptable
trees which drop messy fruits are unacceptable

Botanical Name	***Common Name***
Acer negundo	Box Elder
Acer saccharinum	Silver Maple
Aesculus spp.	Buckeye species
Ailanthus altissima	Tree-of-Heaven
Castanea spp.	Chestnut
Catalpa spp.	Catalpa species
Eleangus angustifolia	Russian Olive
Fraxinus spp.	Ash species
Ginkgo biloba (female)	Female Ginkgo
Halesia spp.	Silverbell species
Maclura pomifera	Osage Orange
Morus spp.	Mulberry species
Oxydendrum spp.	Sourgum species
Populus spp.	Poplar, Cottonwood, Aspen
Prunus spp.	Cherry, Peach , Plum
Pyrus spp.	Flowering Pear species
Rhamnus spp.	Buckthorn species
Robinia spp.	Black Locust
Salix spp.	Willow species
Sorbus spp.	Mountain Ash

F-3 Guidelines for Protecting Existing Trees

To better ensure the survival of existing trees, the developer should follow standard horticultural and construction practices in the area for the protection of existing trees. The following guidelines are a minimum summary of those practices:

- Protect trees with fencing and armoring during the entire construction period. The fence should enclose an area with a 10 foot radius with the tree at the center.
- Avoid compacting the soil around existing trees with heavy equipment. Do not pile dirt or construction materials or waste beneath the crown of the tree.
- Keep fires and sources of extreme heat away from existing trees. Repair damaged roots and branches immediately. Exposed roots should be covered with topsoil. Severed

limbs and roots should be painted. Whenever roots are destroyed, a proportional amount of branches should be pruned so the tree does not transpire more water than it takes in. Injured trees must be thoroughly watered during the next year.

F-4 Guidelines for Planting Trees

The trees on the recommended list have minimal maintenance requirements. However, all trees must receive some care, especially during and immediately after planting. To ensure survival of newly planted, trees, the developer should follow standard horticultural and construction practices in the area for the protection of existing lines. The following guidelines are a minimum summary of those practices:

- The best times for planting are early spring and early fall. Trees planted in the summer run the risk of dehydration.
- Dig the tree pit at least 2-feet wider than the root ball and at least 6 inches deeper than the ball's depth. Loosen the soil within another one foot of the pits circumference.
- If the soil has become compacted, loosen the bottom of the pit with a pick ax or shovel.
- Backfill with good soil. Water backfill as it is placed in the pit.
- Completely cover all roots.
- Immediately after planting support the tree with stakes and wires to hold it firmly in place as its root system begins to develop. Remove support after one year.
- Spread at least 3 inches of mulch over entire excavation to retain moisture and control weeds. Add 3 more inches of mulch in a basin shape immediately around the tree.
- Wrap the lower trunks of new trees with burlap or paper to prevent evaporation and sun scald. Remove after one year.
- Water the tree during extended dry periods and before the first hard frost for the first year.

Appendix G

Water Main, Sanitary Sewer, Storm Sewer Materials List

City of Marengo
Water Main Materials List

Water Main Pipe	Ductile iron pipe, Class 52 in accordance with *AWWA Standard C-151, C-111* and *C-104*, or the following: CL150 C909 PVC Pipe with 12 gauge copper wire or 14" and larger SDR 18 C905 PVC Pipe with 12 gauge copper wire. Valvco Tracer Wire Access Boxes to be installed as required.
Gate Valve (Less than 12" diameter)	Gate Valves shall be cast iron in accordance with *AWWA Standard C-509*, and as manufactured by Mueller Company Model No. A 2360-20. No alternates allowed.
Butterfly Valve (12" diameter & larger)	Butterfly valves shall be cast iron in accordance with *AWWA Standard C-504*, and as manufactured by Mueller Company Model B 3211-20, or Pratt Groundhog.
Valve Vault Frame: And Lid	Pre-cast reinforced concrete in accordance with Article 602.02 and 743.01 of the Standard Specifications for Water and Sewer. Valve Vaults shall be provided with steps.
Fire Hydrant	Fire Hydrants shall be Cast Iron in accordance with AWWA C-502, and as manufactured by Mueller Company, Model No. A423 Super Centurion 250. No alternatives allowed. Hydrants shall have a 6" M.J. connection with 18" separation from 6" Mueller A2360 valve installed with Tyler 664S Valve Box and Adapter II Valve Box Stabilizer. Hydrants shall have two 2-1/2" pentagon operating nut opening counter clockwise and be pained red. Standard depth of bury shall be 6'0" and no hydrants shall exceed 7'0" bury. No more than one extension section shall be allowed. Hydrants shall be furnished with weep holes. Al hydrant parts and extensions must be original manufacturer's parts.

Appendix G (continued)

City of Marengo
Water Main Materials List

Water Main Fittings	Water main fittings shall be ductile iron mechanical joint in accordance with *AWWA Standard C-153*, and shall be manufactured in the United States.
Water Services	Water services shall be Type K copper, 1" – 2" diameter.
Corporation Stop	Corporation stops shall be brass, copper outlet, as manufactured by Mueller Company Model No. H-15008 (1" diameter) or Model No. H-15013 (1-1/2" and 2" diameter). No alternates allowed.
Water Service Saddle	Water saddles shall be manufactured by Smith Blair Model No. 317. No alternates allowed. Tapping PVC water main shall use all Bronze Saddle as manufactured by Mueller Company, H-1300 series or approved equal by the Water Superintendent.
Curb Valve	Curb valves shall be brass, as manufactured by Mueller Company Model No. H 1504-2 (1" diameter) or Model No. B-25155 (1-1/2" and 2" diameter). No alternates allowed.
Curb Box	Curb boxes shall be cast iron, 6' bury and with a 39" rod, as manufactured by Mueller Company Model No. H-10306 (1-1/4" diameter) or Model No. H-10386 (1-1/2" and 2" diameter). No alternates allowed.
Water Meters	Purchased through the City of Marengo.
Tapping Sleeve	Tapping sleeves shall be cast iron and mechanical joint, as manufactured by Mueller Company Model No. H687 or A 2360-16 (resilient wedge valve). No alternates allows.
Valve Boxes	Tyler 664-5 cast iron two-piece box with American-made adopter II rubber valve box stabilizer. No welded threads allowed.

Appendix G (continued)

City of Marengo
Sanitary Sewer Materials List

Sanitary Sewer Pipe	PVC SDR 26, in accordance with ASTM D-3034 or approved equal by Water Superintendent.
Sanitary Manhole	Precast reinforced concrete, in accordance with *Section 32 of the Standard Specifications for Water and Sewer.*
Sanitary Manhole Frame & Lid (In Pavement or Parkway)	In accordance with *Section 32 of the Standard Specifications for Water and Sewer* and as manufactured by Neenah Foundry Co. (R—1712 or R1713) or East Jordan Irion Works, Inc. (No. 1050HD), lids marked "Sanitary" and "Marengo".
Sanitary Manhole Frame Chimney Seal	Sanitary Sewer manhole sections shall be sealed with Mac Wrap or approved equal. Manhole chimneys shall be installed with Internal/External manhole seal as manufactured by Adapter, Inc. Cretex External manhole seal or approved equal.
Sanitary Sewer Fittings	D3034 gasketed wyes with 45 degree bend. Services deeper than 6' shall use risers and riser adaptors.

Appendix G (continued)

City of Marengo
Storm Sewer Materials List

Storm Sewer Pipe	Reinforced concrete pipe in accordance with applicable *Articles 550.03, 740.03, 740.05, and 740.07* of the *Standard Specifications for Road and Bridge Construction (Standard Specifications).*
Storm Sewer Manhole, Type A	Pre-cast reinforced concrete in accordance with *Articles 602.02 and 743.01 of the Standard Specifications.*
Storm Sewer Manhole Frame and Lid	As manufactured by Neenah Foundry Company (R-1772) or East Jordan Iron Works, Inc. (No. 1622, Type M1 cover), lids marked "Storm".
Curb Inlet Frame and Grate, Type 11	In accordance with *Section 604 of the Standard Specifications* and as manufactured by Neenah Foundry Company (R03281-A) or East Jordan Iron Works, Inc. (No. 7210, Type M1 grade).
Catch Basin, Type A or Type C	Pre-cast reinforced concrete in accordance with *Articles 602.02 and 743.01 of the Standard Specifications.*
Catch Basin Frame and Grate, Type 8 or Type 37M	In accordance with *Article 604 of the Standard Specifications* and as manufactured by:

	Neenah Foundry Co.	East Jordan Iron Works, Inc.
Type 8	R-4340-B	No. 6527
Type 37M	R-4342	No. 6489

Pipe Culvert	Corrugated steel pipe in accordance with *Articles 542.02 and 706.01(a)-of the Standard Specifications*
Sump Pump Drains	All drains will be tied into the storm sewer using 6" diameter minimum, PVC SDR 26.
Trench Backfill	CA-6 crushed gravel, in accordance with *Article 704.04 of the Standard Specifications.*

Note: All sections referenced above are from the *Standard Specifications for Road and Bridge Construction*, adopted July 1, 1994.

Water System Details

Frhydet

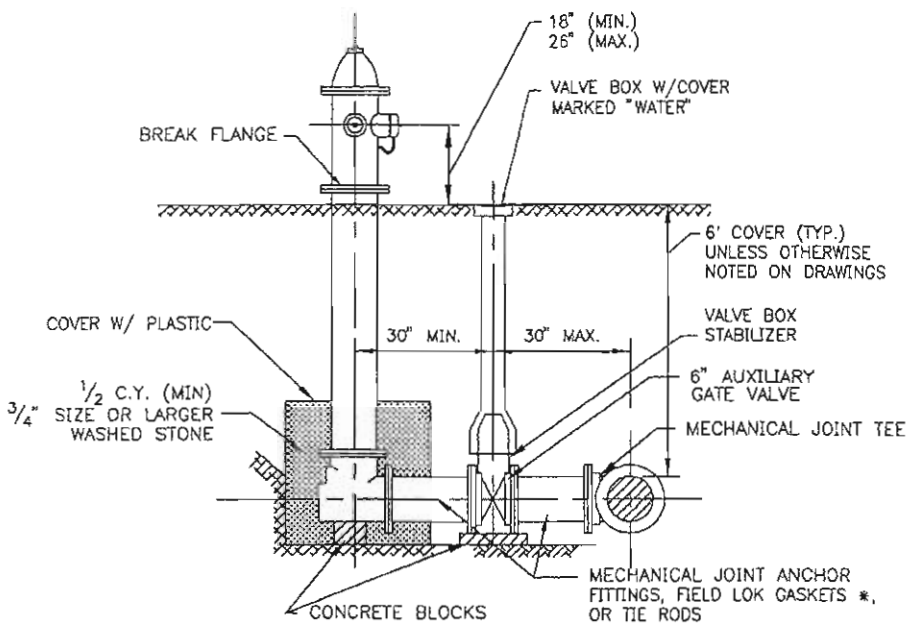

* NOTE: MECHANICAL JOINT FITTINGS ARE NOT REQUIRED WHERE FIELD LOK GASKETS ARE UTILIZED.

STANDARD FIRE HYDRANT INSTALLATION

NO SCALE

6-24-02

STANVAVT

NOTES:

1. CONCENTRIC CONE REQUIRED
2. USE 4'–0" DIAMETER FOR WATER MAIN SIZES 4" THRU 10", 5'–0" FOR SIZES 12" THRU 18" 6'–0" FOR 20" OR GREATER

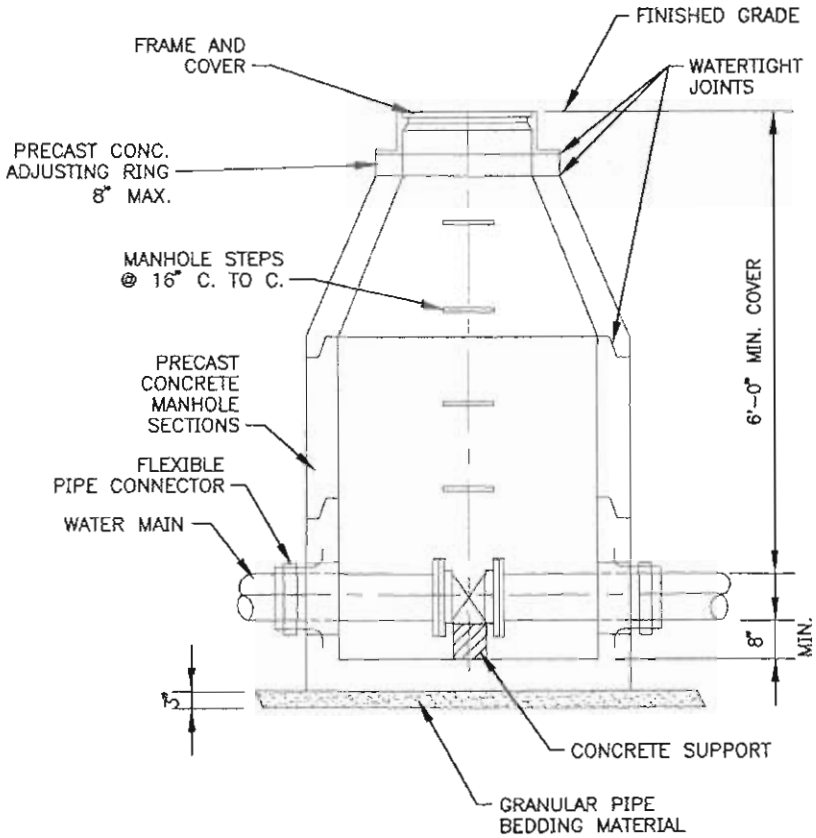

STANDARD VALVE VAULT DETAIL

NO SCALE

PCVAVT

NOTES:

1. ECCENTRIC CONE REQUIRED
2. USE 4'–0" DIAMETER
   FOR WATER MAIN SIZES 4" THRU 10",
   USE 5'–0" DIAMETER
   FOR WATER MAIN SIZES 12" THRU 20",
   USE 6'–0" DIAMETER
   FOR WATER MAIN SIZES 20" OR GREATER.

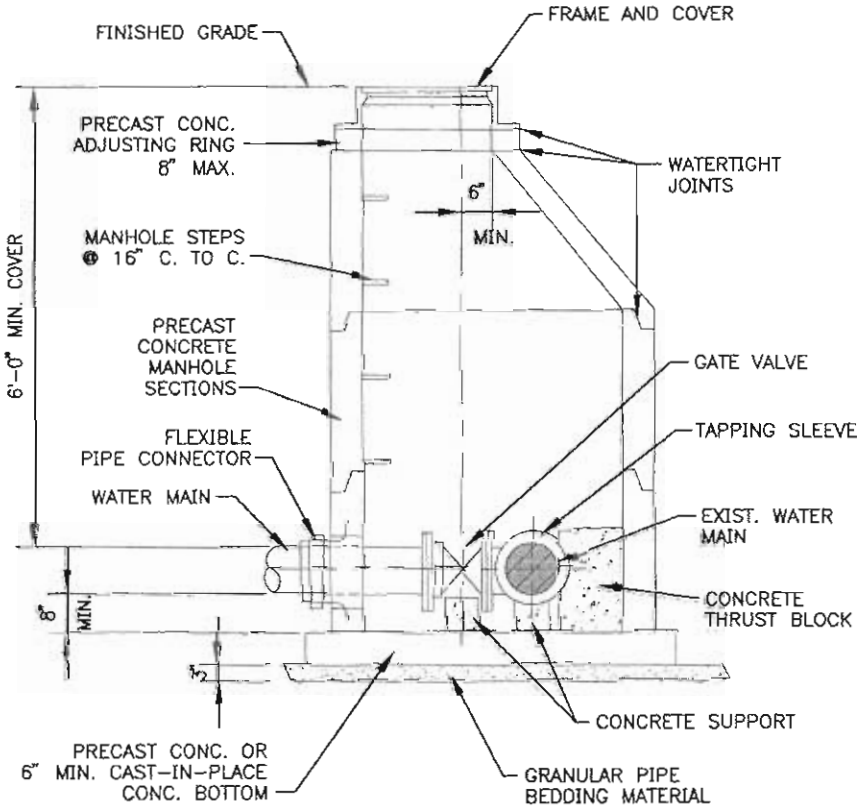

PRESSURE CONNECTION VALVE VAULT DETAIL

NO SCALE

Wmrel

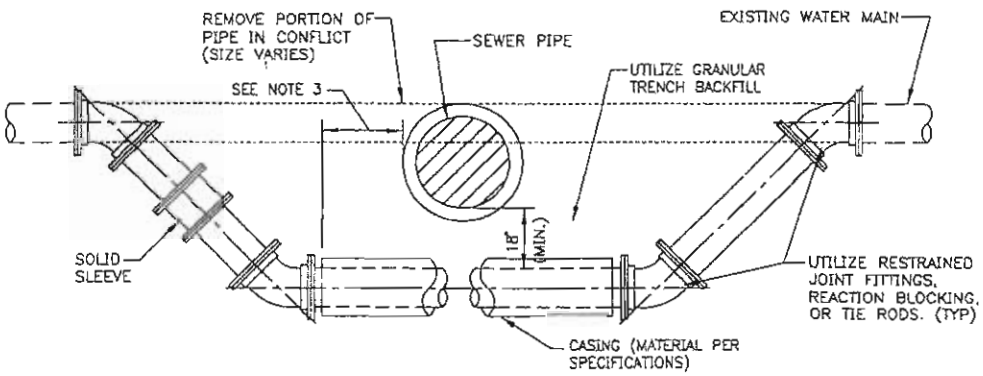

NOTE: 1. WATER MAIN RELOCATIONS ARE SUBJECT TO INSPECTION AT NORMAL SYSTEM PRESSURE BEFORE BURIAL.
2. USE ONLY 45 DEGREE BENDS UNLESS OTHERWISE PERMITTED BY THE ENGINEER.
3. CASING MUST EXTEND A MINIMUM OF 10 FEET BEYOND OUTSIDE EDGE OF SEWER PIPE – ON BOTH SIDES OF SEWER.

WATER MAIN RELOCATION – DUCTILE IRON

NO SCALE

6-24-02

Thrustbk

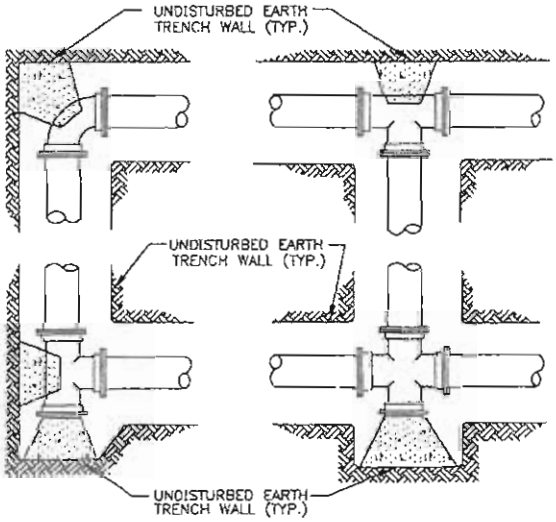

PLANS

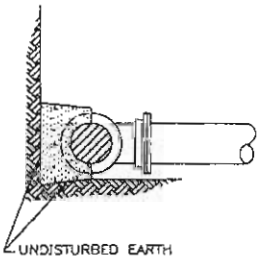

SECTIONS

NOTES

1. PROVIDE PRECAST OR CAST-IN-PLACE CONCRETE THRUST BLOCKS OF ADEQUATE SIZE AND THRUST BEARING SURFACE TO PREVENT MOVEMENT OF PIPELINE UNDER PRESSURE.

2. PLACE THE BASE AND THRUST BEARING SIDES OF THRUST BLOCK DIRECTLY AGAINST UNDISTURBED EARTH.

3. PLACE THRUST BLOCKING SO THE FITTING JOINTS WILL BE ACCESSIBLE FOR REPAIR.

TYPICAL THRUST BLOCK INSTALLATIONS

NO SCALE

6-24-02

Wsrv

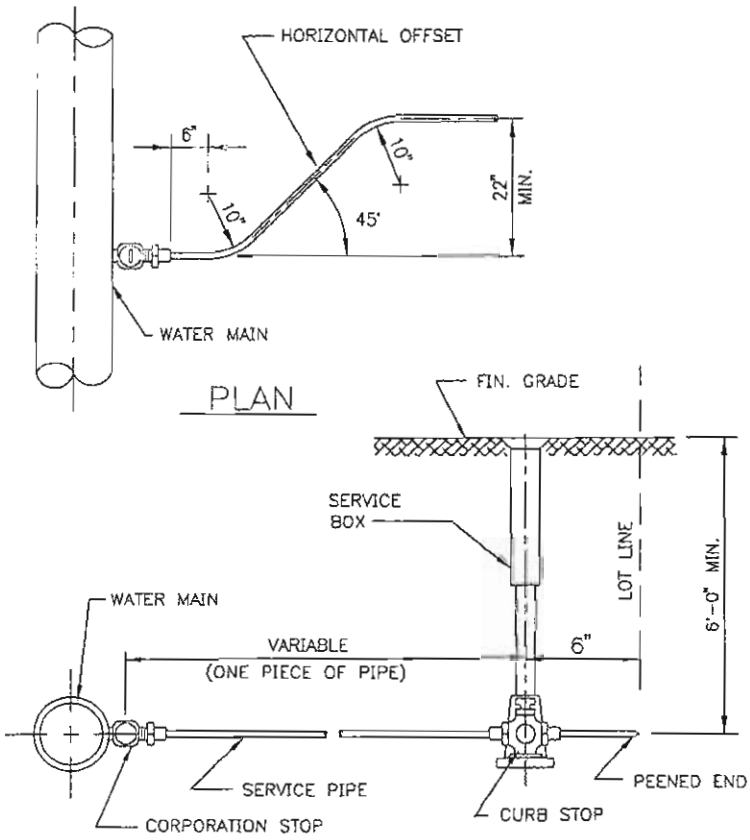

SERVICE PIPE	CORP. STOP	CURB STOP	SERVICE BOX
3/4"	3/4"	3/4"	2 1/2"
1"	1"	1"	2 1/2"
1 1/4"	1 1/4"	1 1/4"	3"
1 1/2"	1 1/4" X 1 1/2"	1 1/2"	3"
2"	1 1/2" X 2"	2"	3"

WATER SERVICE INSTALLATION

NO SCALE

6-24-02

Wsconnbb

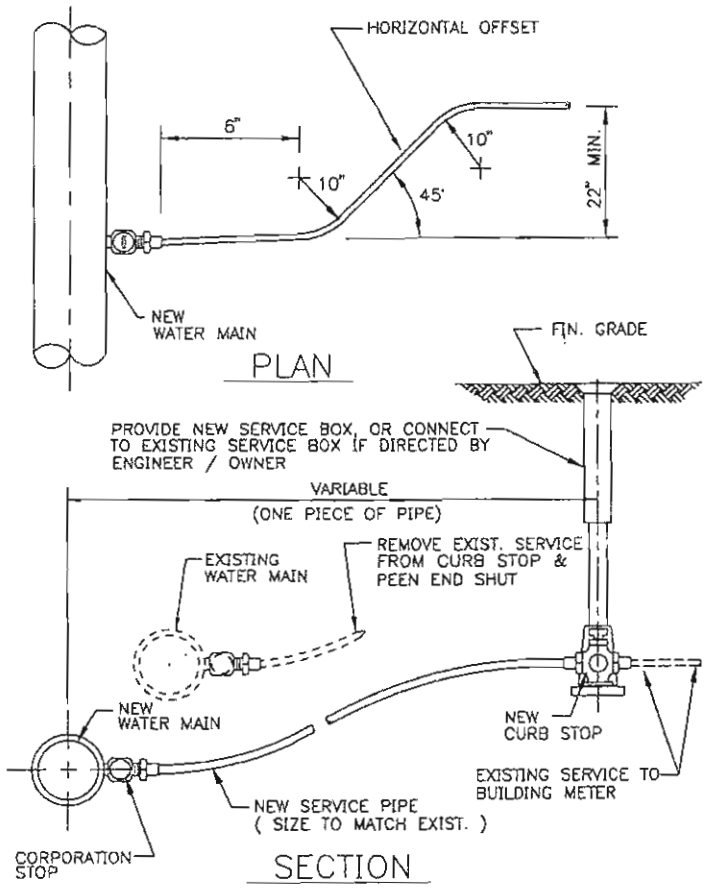

SERVICE PIPE	CORP. STOP	CURB STOP	SERVICE BOX
3/4"	3/4"	3/4"	2 1/2"
1"	1"	1"	2 1/2"
1 1/4"	1 1/4"	1 1/4"	3"
1 1/2"	1 1/4" X 1 1/2"	1 1/2"	3"
2"	1 1/2" X 2"	2"	3"

EXISTING WATER SERVICE RECONNECTION DETAIL

NO SCALE

6-24-02

Sanitary Sewer System Details

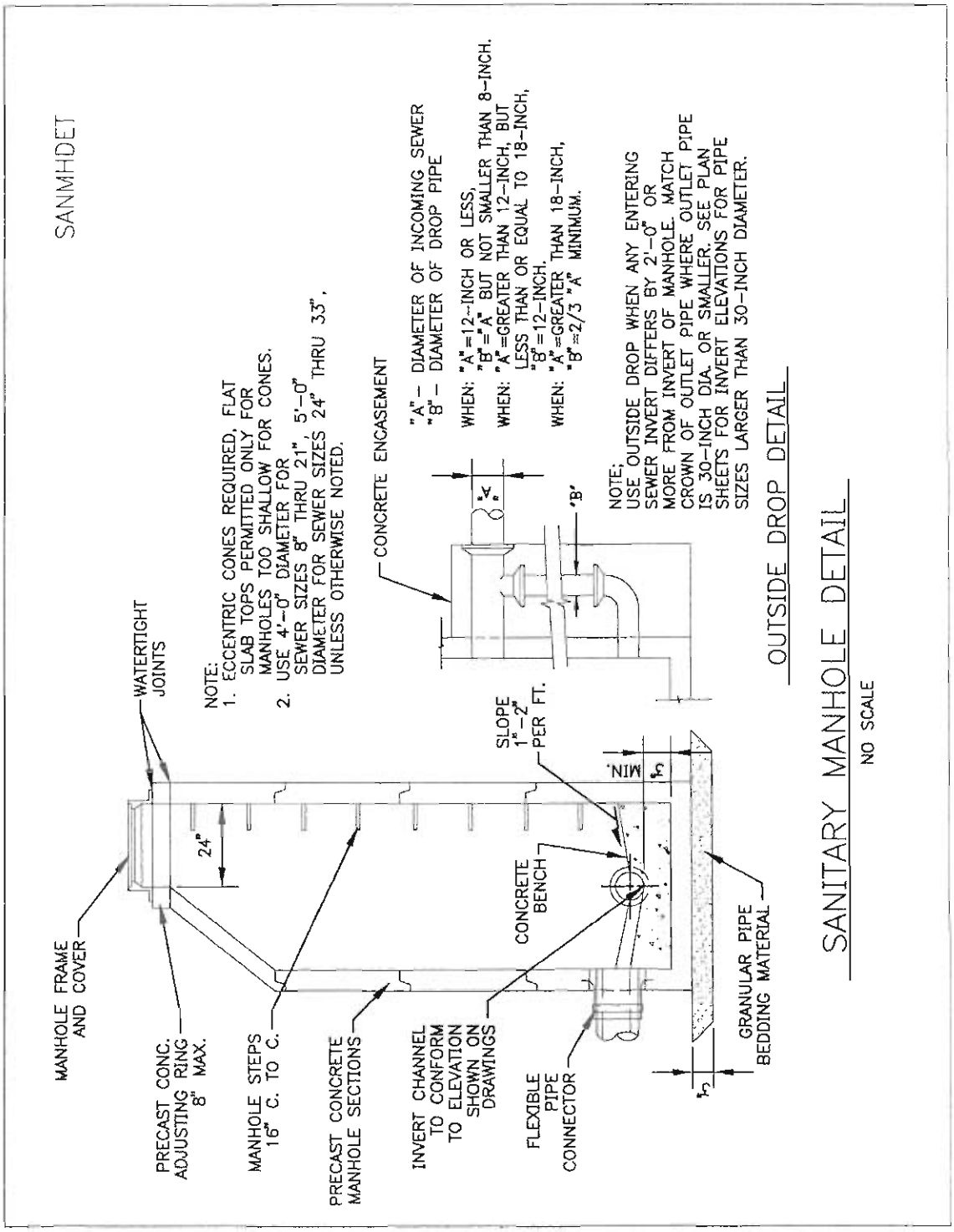

wt–frm_cvr

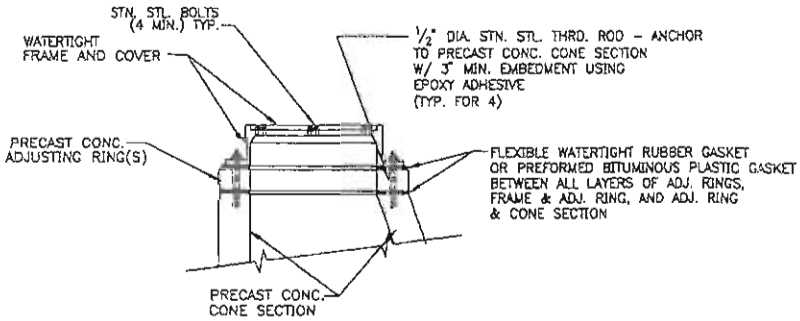

WATERTIGHT FRAME & COVER DETAIL

NO SCALE

6–24–02

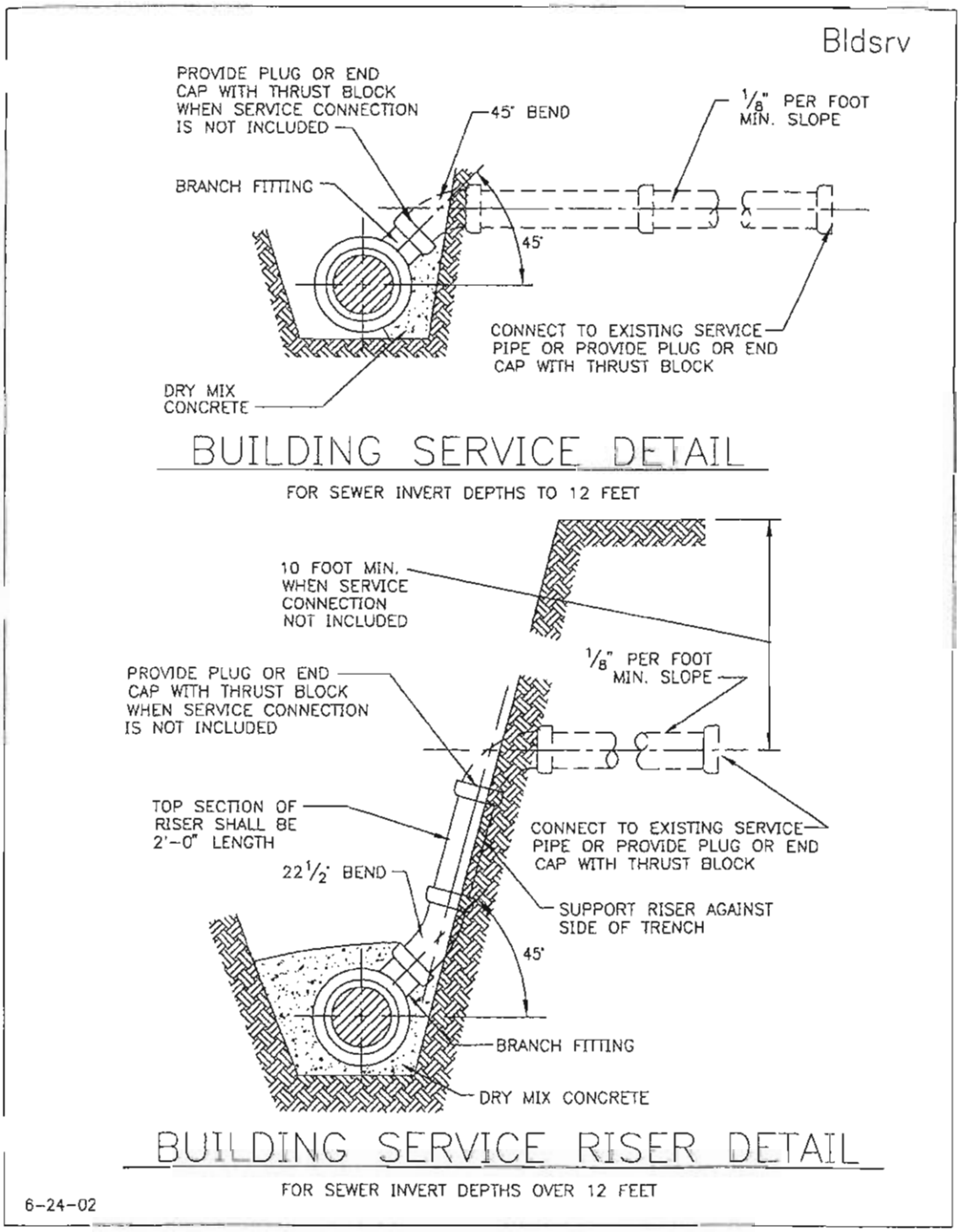
Bldsrv
PROVIDE PLUG OR END CAP WITH THRUST BLOCK WHEN SERVICE CONNECTION IS NOT INCLUDED
45° BEND
1/8" PER FOOT MIN. SLOPE
BRANCH FITTING
45°
CONNECT TO EXISTING SERVICE PIPE OR PROVIDE PLUG OR END CAP WITH THRUST BLOCK
DRY MIX CONCRETE
BUILDING SERVICE DETAIL
FOR SEWER INVERT DEPTHS TO 12 FEET
10 FOOT MIN. WHEN SERVICE CONNECTION NOT INCLUDED
1/8" PER FOOT MIN. SLOPE
PROVIDE PLUG OR END CAP WITH THRUST BLOCK WHEN SERVICE CONNECTION IS NOT INCLUDED
TOP SECTION OF RISER SHALL BE 2'-0" LENGTH
CONNECT TO EXISTING SERVICE PIPE OR PROVIDE PLUG OR END CAP WITH THRUST BLOCK
22 1/2° BEND
SUPPORT RISER AGAINST SIDE OF TRENCH
45°
BRANCH FITTING
DRY MIX CONCRETE
BUILDING SERVICE RISER DETAIL
FOR SEWER INVERT DEPTHS OVER 12 FEET
6-24-02

Storm Sewer System Details

STMMHDET

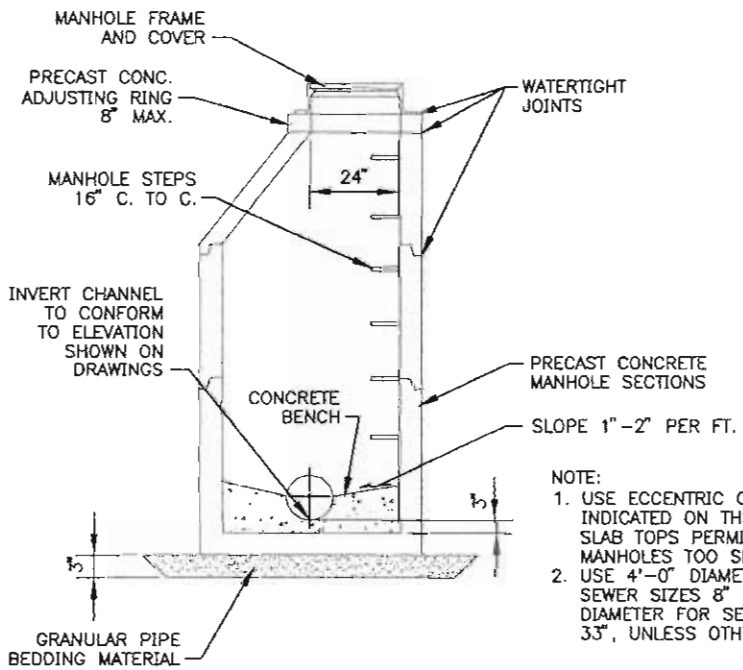

NOTE:
1. USE ECCENTRIC CONES UNLESS OTHERWISE INDICATED ON THE DRAWINGS. FLAT SLAB TOPS PERMITTED ONLY FOR MANHOLES TOO SHALLOW FOR CONES.
2. USE 4'-0" DIAMETER FOR SEWER SIZES 8" THRU 21", 5'-0" DIAMETER FOR SEWER SIZES 24" THRU 33", UNLESS OTHERWISE NOTED.

STORM MANHOLE DETAIL

NO SCALE

CBDET-A

NOTE:
1. USE CONCENTRIC CONES UNLESS OTHERWISE INDICATED ON THE DRAWINGS. FLAT SLAB TOPS PERMITTED ONLY FOR MANHOLES TOO SHALLOW FOR CONES.
2. USE THE TYPE OF FRAME AND COVER INDICATED ON THE DRAWINGS.

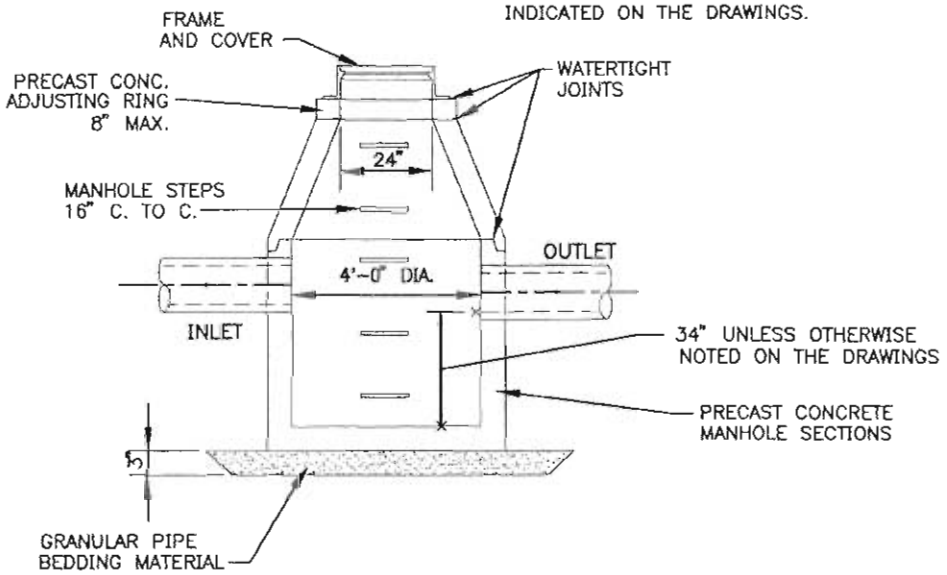

CATCH BASIN – TYPE A

NO SCALE

Cbdet–c

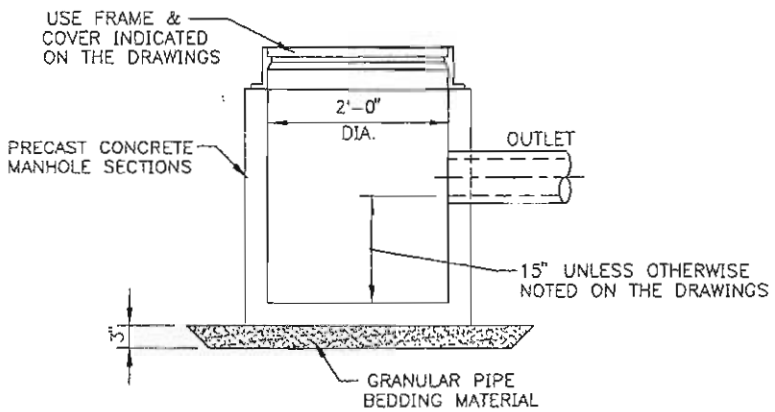

CATCH BASIN – TYPE C

NO SCALE

6–24–02

Appendix H

FEES

FEES (TO BE MOVED TO SEPARATE ORDINANCE AT FUTURE DATE)

FEE TABLE

ARTICLE	FEE AMOUNT
ARTICLE 8 FEES	
Retained Personnel Fees	
1. Up to 10 acres	$2,500.00
2. Greater than 10 acres, but no more than 20 acres	$250 per acre
3. Twenty or more acres	$5,000
Filing Fee: Preliminary Plat	$0.20 per lot with a minimum of $10.00.